# EVAPCO, INC.

| UNIT | MODEL # | SCALE | DWG. # | REV. | DATE | SERIAL # |
|---|---|---|---|---|---|---|
| **CLOSED CIRCUIT COOLER** | LSCE 1000 | NTS | WZ12184808-MRA-ST | | 5/17/2024 | |

NOTES:
1. (M)- FAN MOTOR LOCATION
2. HEAVIEST SECTION IS LOWER SECTION
3. MPT DENOTES MALE PIPE THREAD
   FPT DENOTES FEMALE PIPE THREAD
   BFW DENOTES BEVELED FOR WELDING
4. +UNIT WEIGHT DOES NOT INCLUDE ACCESSORIES (SEE SEPARATE DRAWINGS FOR ACCESSORIES)
5. 19mm DIA. MOUNTING HOLES. REFER TO RECOMMENDED STEEL SUPPORT DRAWING
6. MAKE-UP WATER PRESSURE-137 kPa MIN, 344 kPa MAX
7. - APPROXIMATE DIMENSIONS DO NOT USE FOR PRE-FABRICATION OF CONNECTING PIPING
8. MAKE-UP IS LOCATED 121mm FROM CONNECTION END

Preliminary

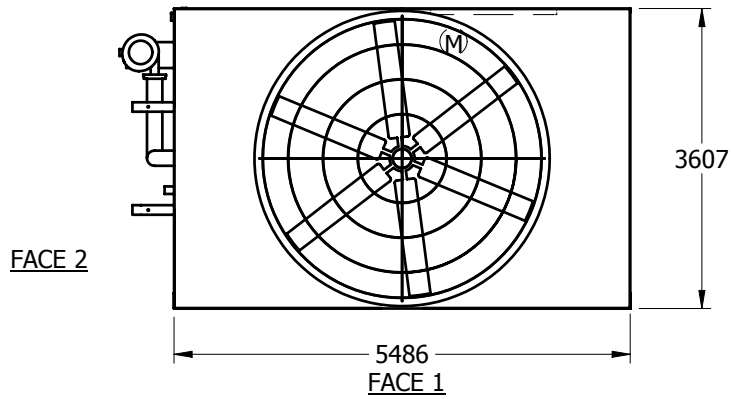


**PLAN VIEW**

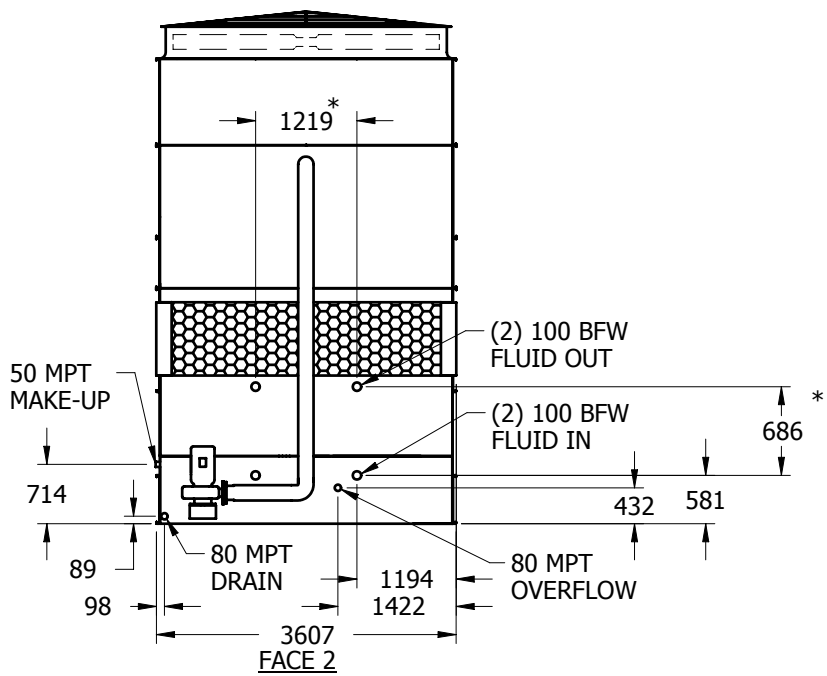


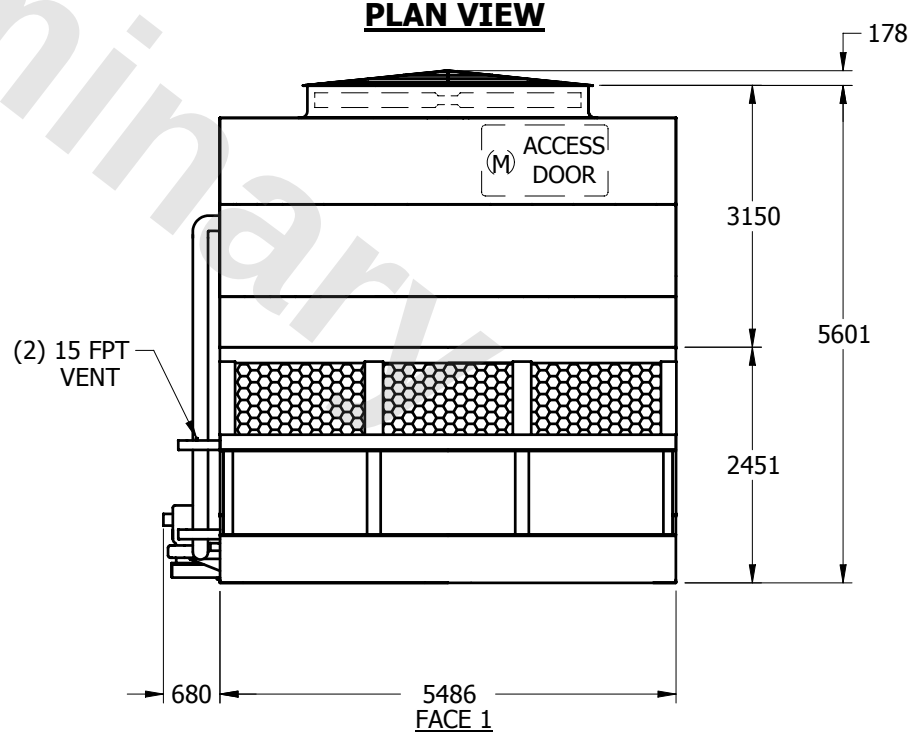


| SHIPPING WEIGHT | OPERATING WEIGHT | HEAVIEST SECTION WEIGHT | NO. OF SHIPPING SECTIONS |
|---|---|---|---|
| 11050 kg + | 16855 kg | 7085 kg | 2 |