EVAPCO, INC.

UNIT	MODEL #	SCALE	DWG. #	REV.	DATE	SERIAL #
COOLING TOWER		NTS	RP171136-MRB-GDST			

NOTES:
1. (M)- FAN MOTOR LOCATION
2. HEAVIEST SECTION IS LOWER SECTION
3. MPT DENOTES MALE PIPE THREAD
   FPT DENOTES FEMALE PIPE THREAD
   BFW DENOTES BEVELED FOR WELDING
4. + UNIT WEIGHT DOES NOT INCLUDE ACCESSORIES (SEE SEPARATE DRAWINGS FOR ACCESSORIES)
5. 19mm DIA. MOUNTING HOLES. REFER TO RECOMMENDED STEEL SUPPORT DRAWING
6. MAKE-UP WATER PRESSURE-137 kPa MIN, 344 kPa MAX

Preliminary

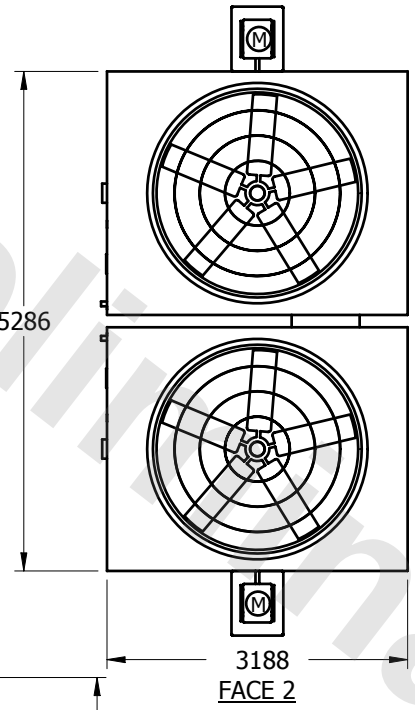

FACE 1
PLAN VIEW

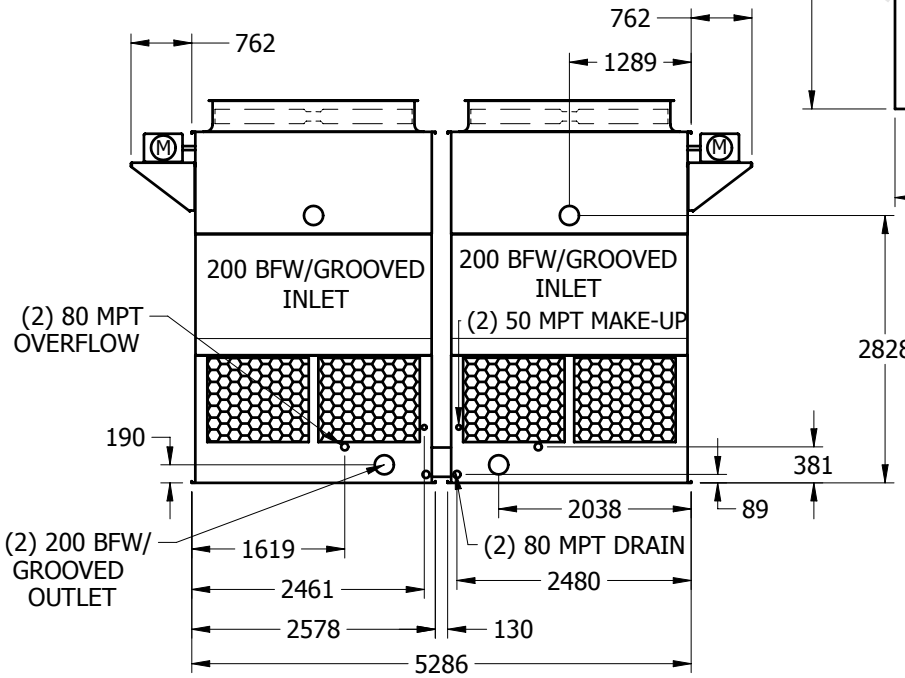

FACE 1

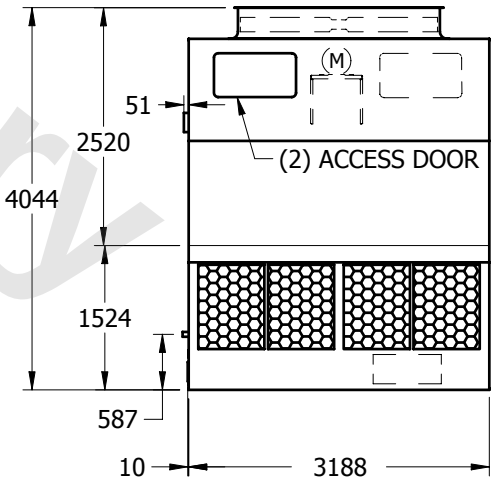

FACE 2

SHIPPING WEIGHT	4725 kg +	OPERATING WEIGHT	7540 kg	HEAVIEST SECTION WEIGHT	1575 kg	NO. OF SHIPPING SECTIONS	4