EVAPCO, INC.

UNIT	MODEL #	SCALE	DWG. #	REV.	DATE	SERIAL #
CLOSED CIRCUIT COOLER	PMC-992E	NTS	W2123606-MRC-LFHR		3/28/2024	

NOTES:
1. (M)- FAN MOTOR LOCATION
2. HEAVIEST SECTION IS UPPER SECTION
3. MPT DENOTES MALE PIPE THREAD
   FPT DENOTES FEMALE PIPE THREAD
   BFW DENOTES BEVELED FOR WELDING
4. + UNIT WEIGHT DOES NOT INCLUDE ACCESSORIES (SEE SEPARATE DRAWINGS FOR ACCESSORIES)
5. 19mm DIA. MOUNTING HOLES. REFER TO RECOMMENDED STEEL SUPPORT DRAWING
6. THE SPRAY PUMP SHOULD BE SIZED FOR 151 L/S AND 17 kPa AT THE INLET CONNECTION
7. *- APPROXIMATE DIMENSIONS DO NOT USE FOR PRE-FABRICATION OF CONNECTING PIPING

Preliminary

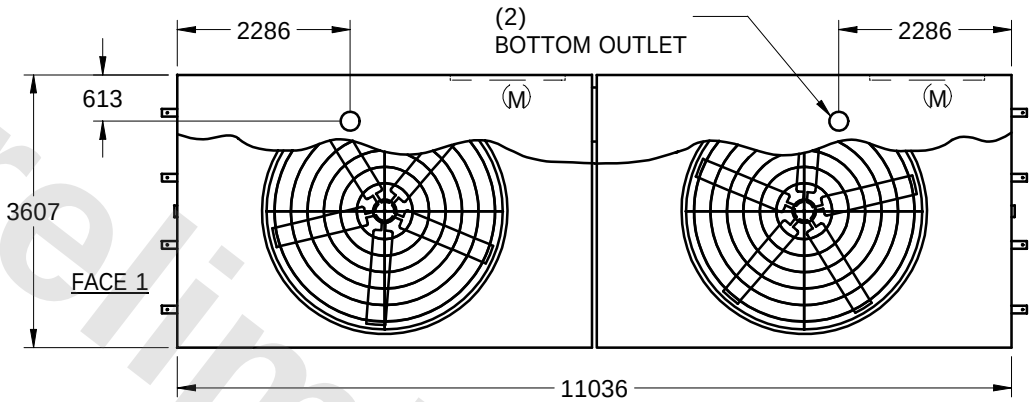

PLAN VIEW

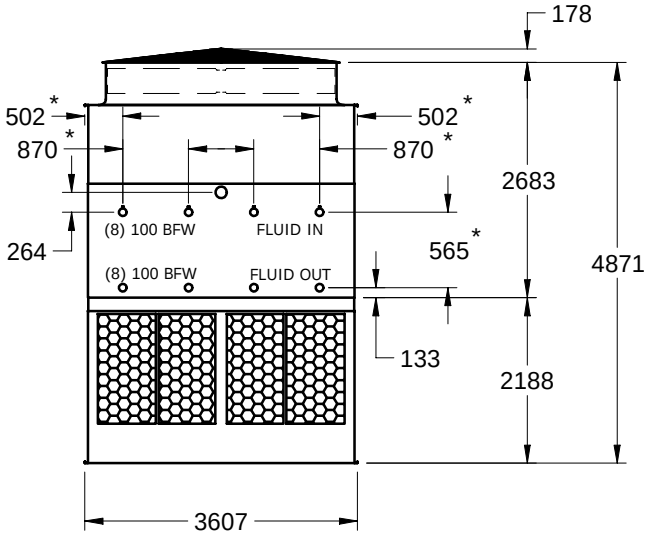

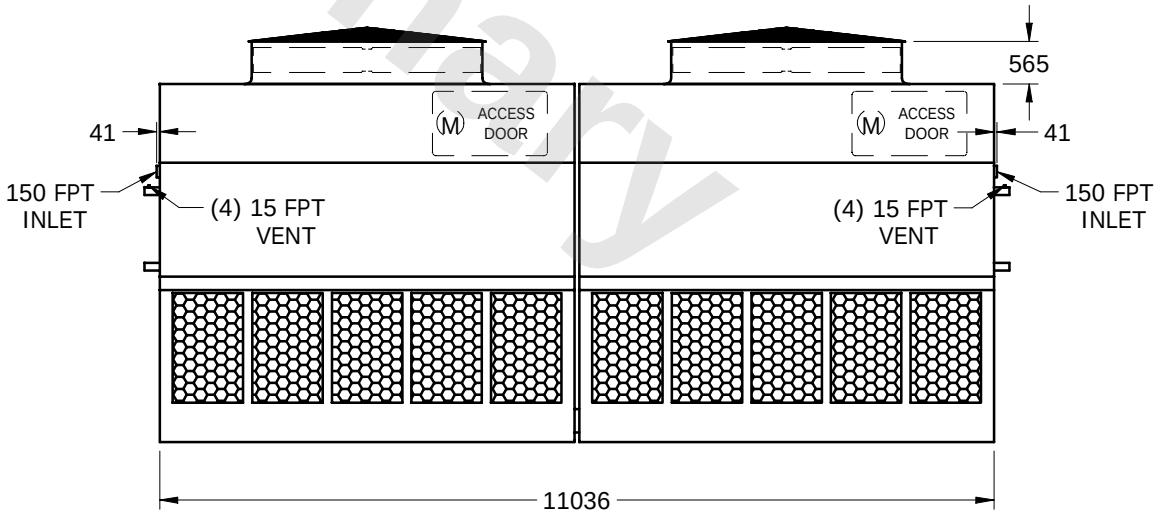

SHIPPING WEIGHT	19540	kg +	OPERATING WEIGHT	26260	kg	HEAVIEST SECTION WEIGHT	7985	kg	NO. OF SHIPPING SECTIONS	4