COOLING TOWERS

AT

Advanced Technology (AT) Series

The Industry's Smartest Induced Draft, Counterflow Cooling Towers

evapco® for LIFE

EUROVENT CERTIFIED PERFORMANCE
CT N° : 12.02.008
Range : AT
www.eurovent-certification.com

CTI CERTIFIED

*Mark owned by the Cooling Technology Institute

Get to Know EVAPCO

- The global innovator in heat transfer solutions
- Serving the commercial HVAC, industrial refrigeration, power generation, and industrial processing markets
- Founded in 1976
- Employee-owned
- 24 facilities in 10 countries
- More than 170 sales offices worldwide

Learn More Now.

Visit evapco.eu to view complete product specs, download product catalogs, and more.

EVAPCO is more than a name.

It's a pledge to make everyday life easier, more comfortable, more reliable, and more sustainable for people everywhere. How do we fulfill on that promise? It's simple.

We never stop innovating.

At EVAPCO, we don't just talk about innovation. It's ingrained in our workflow. Guided by our annually developed R&D plans, we set out every day to find groundbreaking solutions that transform the way the world works for the better. It's why we have more than 25 patents worldwide in the last 10 years alone.

We craft exceptionally built solutions.

As an employee-owned company, we take pride in our work. We are proud to be one of the most experienced teams of engineers and craftsmen in the industry. This translates into solutions that are always exceptionally built. EVAPCO has an unwavering commitment to provide "best in class" heat transfer solutions and services.

We guarantee performance.

Every EVAPCO solution is put through rigorous research and testing to deliver maximum efficiency and reliability. But we don't stop there. We also lead the industry in independent, third-party performance certifications. These certifications guarantee our performance metrics—so that you can plan your projects with complete peace of mind.

We protect the environment.

Innovation and environmental sustainability go hand-in-hand at EVAPCO. Our industrial heat transfer equipment not only conserves natural resources and helps reduce noise pollution, but also feature recycled steel content in construction. EVAPCO's stainless steel units are constructed of panels that contain up to 75% of recycled content, and our galvanized units contain over 80%. From sound reduction to water conservation to chemical elimination, we are continuously developing new technologies that deliver the ultimate operating advantages to our clients—while protecting the planet for every generation to come.

We are EVAPCO—the team you can count on for life.

The Advanced Technology Series: The Industry's Smartest Cooling Towers

Crafted from decades of engineering know-how, the Advanced Technology (AT) cooling tower series from EVAPCO features state-of-the-art induced draft, counterflow technology to deliver superior operating advantages in any climate. From performance to maintenance, they simply work smarter.

2 Advanced Technology Options. More Possibilities.

Available in 60 cross sections and a capacity range of 33 to 5,141 nominal tons (144 to 22,596 kW).
See page 26 for model-by-model dimensions.

AT The original compact, low-horsepower, induced draft, axial fan solution for all outdoor applications.

Optional All-stainless-steel AT construction for maximum corrosion resistance, ideal for coastal and other corrosive environments. See page 7 to learn more.

Principle of Operation

Warm water from the heat source is pumped to the water distribution system at the top of the tower. The water is distributed over the wet deck fill by means of large opening EvapJet™ nozzles. Simultaneously, air is drawn in through the air inlet louvers at the base of the tower and travels upward through the wet deck fill opposite the water flow. A small portion of the water is evaporated which removes the heat from the remaining water. The warm moist air is drawn to the top of the cooling tower by the fan and discharged to the atmosphere. The cooled water drains to the basin at the bottom of the tower and is returned to the heat source.

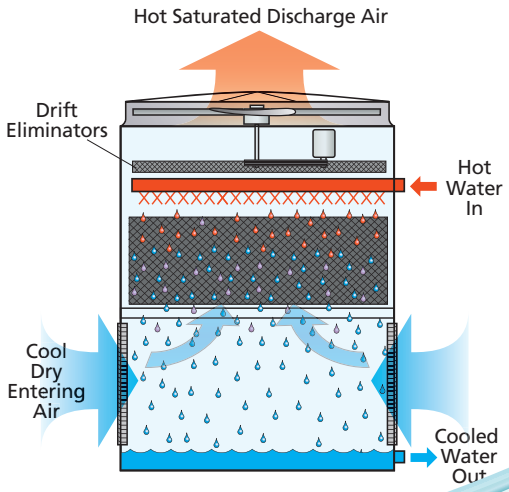

Table of Contents

The Advanced Technology Tower at a Glance 4
Innovative Design Features 6
All-stainless-steel AT construction 7
Eurovent-CTI Certified AT Cooling Towers 9
POWER-BAND Belt Drive System 12
Easy Maintenance Basin 14
Optional Equipment: Electric Basin Heaters, Water Treatment Systems, Low Sound Solutions 15
Additional Resources: Understanding & Specifying Sound 22
EVAPCO Technical Support 24
Engineering Data & Dimensions 25

The Advanced Technology Series at a Glance

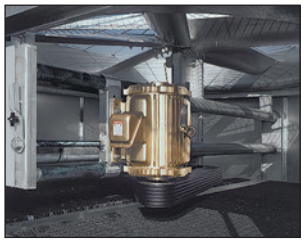

Totally Enclosed Fan Motors

- Motors positioned for easy accessibility and extended serviceability
- Assures long life
- Energy efficient/inverter capable motors supplied as standard
- Optional space heaters available to eliminate condensation while idle

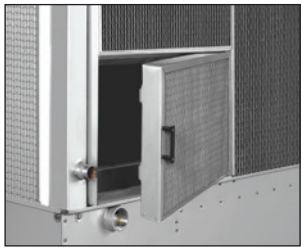

Louver Access Door

- Hinged access panel with quick release mechanism
- Allows easy access to perform routine maintenance and inspection of the makeup assembly, strainer screen, and basin
- Standard on models with louvers 1,5 m and taller

US Patent No. 7,927,196

WST Air Inlet Louvers *(Water and Sight Tight)*

- Easily removable for access
- Framed in same material as tower basin
- Improved design to keep sunlight out–preventing biological growth
- Keeps water in while keeping dirt and debris out

EVAPCO POWER-BAND Drive System

- Easy-maintenance, heavy-duty drive system
- Standard heavy-duty pillow-block bearings with a minimum L10 life of 75,000 hours
- Extended lube lines
- External motor/belt adjustment
- Solid-back multigroove belts and totally enclosed motors are standard

IBC* Compliant Design

- All standard models meet IBC requirements
- Upgraded designs for high seismic and wind load areas

US Patent Nos.7,938,373 and 7,963,492

Optional Motor Davit & Working Platform

- Motor davit and bracket option for easy motor and fan removal
- Also available for gearbox removal
- Platform with ladder and safety cage arrangement available as an option
- Provides a robust self-supporting working surface for the service mechanic

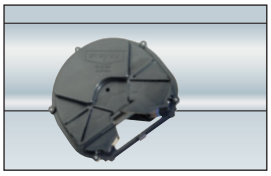

EvapJet™ nozzle

Water Distribution System

- EvapJet™ nozzles provides thermal performance gain
- Non-corrosive PVC construction
- Large orifice nozzles prevent clogging and are threaded for easy removal and positive positioning
- Each nozzle provides a large uniform spray pattern

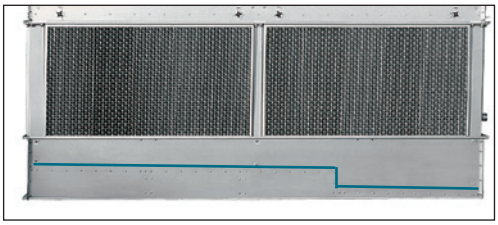

Clean Pan Sloped Basin Design

- Designed to completely drain the cold water basin
- Helps prevent buildup of sediment and biological film
- Eliminates standing water after drain down

(See details of design on page 14)

The EVAPCO Performance Guarantee
ECC-CTI Certified | IBC Compliant | ASHRAE 90.1 Compliant

Every Advanced Technology product is rigorously thermal performance tested by EVAPCO and then independently certified by the Eurovent Association and the Cooling Technology Institute (CTI) so you know you're getting a solution that's guaranteed to get the job done.

* *International Building Code*

** *Mark owned by the Cooling Technology Institute*

Innovative Design Features

With EVAPCO, you get a partner you can count on to keep you at the cutting edge of your field. That's because we build innovation into every HVAC solution that we deliver to you. Here are just some of the game-changing features you'll find in the Advanced Technology cooling tower series.

Optimum Design for Freezing Climates

The Advanced Technology cooling tower series features a totally encased wet-deck fill which inhibits direct exposure to the elements, as well as a bonded-block structure with bottom supports to provide additional support should ice form. On top of that, the counterflow design's even-temperature gradient ensures all water is cooled to the same temperature. Together, these smarter design elements make the Advanced Technology series the ideal solution for severe climates.

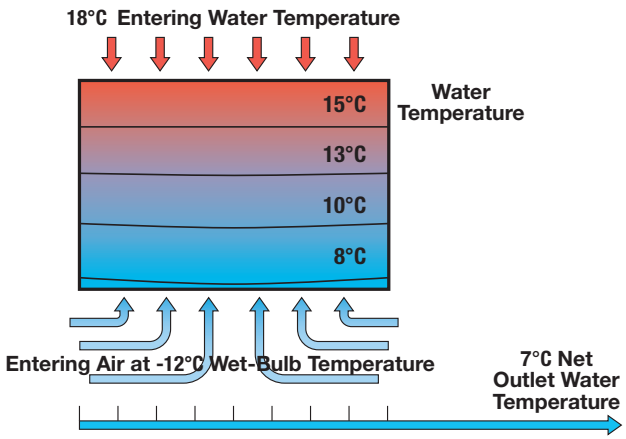

EVAPAK® Fill

EVAPAK® fill is specially designed to induce a highly turbulent mix of air and water for superior heat transfer. Special drainage tips allow high water loadings without excessive pressure drops.

EVAPAK is constructed of inert polyvinyl chloride (PVC), so it will not rot or decay. It can also withstand water temperatures of 55° C. (An option for higher water temperatures is also available. Consult your EVAPCO representative to learn more.)

The bottom support of the fill section, combined with the unique way in which EVAPAK's cross-fluted sheets are bonded together, greatly enhances the fill's structural integrity, making it usable as a working platform for internal access to the fan and drive system.

EVAPAK is also self-extinguishing with a flame spread rating less than 25 under ASTM-E84.

High-Efficiency Drift Eliminators

EVAPCO's extremely efficient drift eliminator system removes entrained water droplets from the air stream, limiting the drift rate to less than 0.001% of the recirculating water rate in most instances. This saves valuable water and enables you to place your cooling tower in areas where minimum water carryover is critical, such as parking lots.

The drift eliminators are constructed of inert PVC, which effectively eliminates corrosion of these vital components. They are assembled in sections to facilitate easy removal for inspection of the water distribution system.

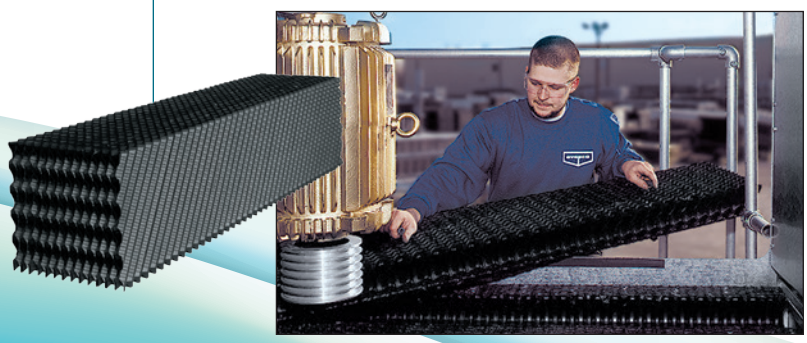

All-stainless-steel Advanced Technology

Complete Stainless Steel Construction for Maximum Corrosion Resistance

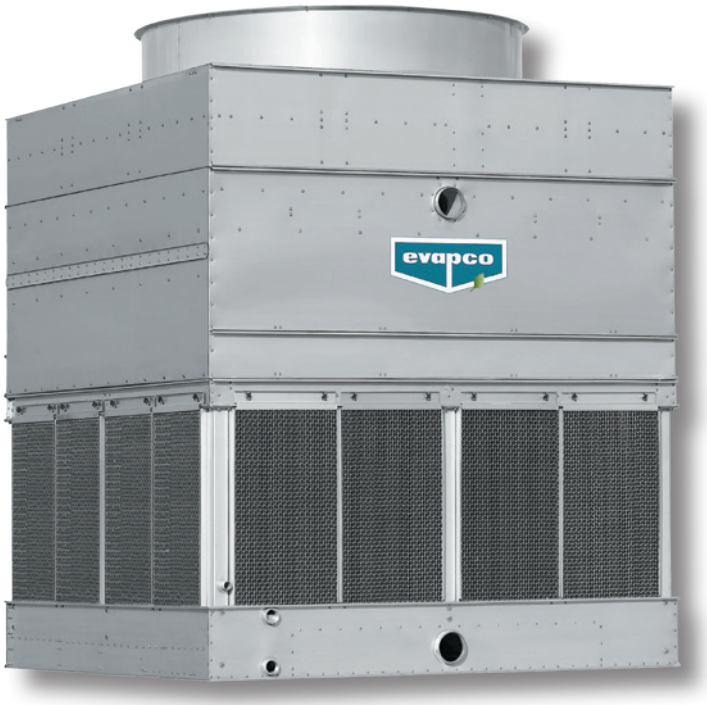

What do you get when you combine the easy maintenance and superior operation of the Advanced Technology series with the industry's most durable construction?

All-stainless-steel Advanced Technology from EVAPCO— the finest factory assembled cooling tower ever offered.

Premium Components		
Type 304L or 316L Stainless Steel	***Type 304L or 316L Stainless Steel****	***PVC***
Cold water basin	Upper casing and structure	Patented EVAPAK® fill
Vertical support columns	Mechanical equipment support	Water distribution system
Air inlet louver frames	Fan cowl and fan guard	Patented air inlet louvers
Plenum		Patented drift eliminators

** Complete 304L stainless steel construction, or 316L cold water basin with 304L Upper casing and structure or complete 316L stainless steel construction available for a minimal cost upgrade.*

ECC-CTI Certified-Standard 201

- Independently certified for guaranteed performance
- No costly field performance tests required

***Mark owned by the Cooling Technology Institute*

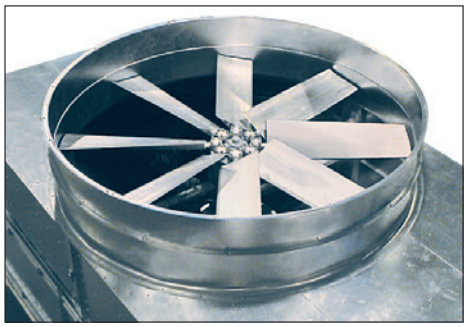

Smooth Flow Fans

Smooth flow axial propeller fans come standard on all Advanced Technology series cooling towers. Fan construction is dependent on unit size:

- 1.2 m-wide: Fiberglass-reinforced polypropylene (PPG) wide chord blades with die-cast aluminum hub
- Over 1.2 m: 100% aluminum alloy

All fans are statically balanced and installed in a closely fitted cowl with venturi air inlet for maximum efficiency. Fan screens are constructed of galvanized steel or optional type 304L stainless steel, and have steel frames bolted to the fan cowl.

Low sound and super low sound fan options are also available. See page 20 to learn more.

Pressurized Water Distribution System

The Advanced Technology series' water distribution system is made of schedule 40 PVC pipe and EvapJet™ ABS plastic water nozzles for critical corrosion protection. The piping is easily removable for cleaning. The water nozzles have a 25 mm diameter opening to help eliminate costly clogging.

The spray pressure for all Advanced Technology series cooling towers is between 7 and 41 kPa at the inlet header. (Actual spray pressure will be provided on the submittal prepared for your unit.)

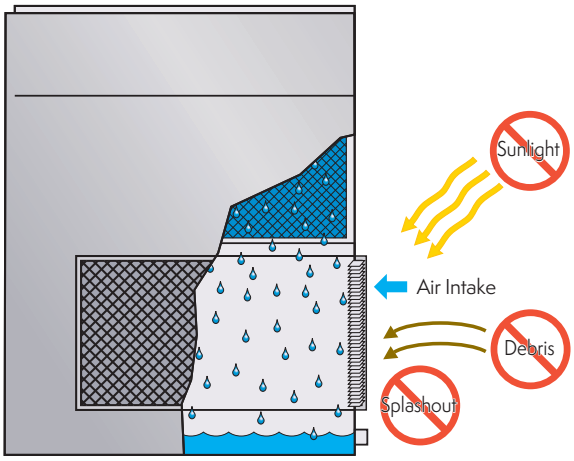

Superior Air Inlet Louver and Screen Design

EVAPCO's water and sight tight (WST) inlet louver keeps water in and sunlight out of your Advanced Technology series cooling tower. The unique, non-planar design is made from lightweight, framed PVC sections which have no loose hardware, enabling easy unit access. The louver's air channels are optimized to maintain fluid dynamic and thermodynamic efficiency and block all line-of-sight paths into the basin, eliminating splash-out even when the fans are off. And because all sunlight is blocked, algae growth is minimized. The end result: reduced maintenance hours, water consumption, and water treatment costs.

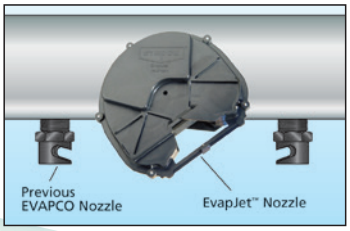

EvapJet™ nozzle compared to previous EVAPCO nozzles

Eurovent-CTI Certified AT Cooling Towers

CTI Standard-201

This standard sets forth a program whereby the Cooling Technology Institute will certify that all models of a line of evaporative heat rejection equipment offered for sale by a specific manufacturer will perform thermally in accordance with the manufacturer's published ratings.

In its continuing commitment to be the leaders in evaporative cooling equipment design and services, EVAPCO AT Cooling Towers are now ***Independently Certified by CTI***, to perform thermally in accordance with the published data.

What is CTI?

Cooling Technology Institute

The Cooling Technology Institute is an organization headquartered in the United States with over 400 member companies from around the globe. CTI membership is composed of manufacturers, suppliers, owner operators, and test agencies from over 40 countries. In 2008 CTI certified more than 5000 Evaporative Heat Transfer Systems (EHTS) from 49 product line of 24 participants.

CTI's Mission and Objectives

This can be best explained by the CTI's published Mission statement and Objectives revised in December 2003 and published on their website **www.cti.org**.

CTI Mission Statement

To advocate and promote the use of environmentally responsible Evaporative Heat Transfer Systems (EHTS) for the benefit of the public by encouraging:

- Education
- Research
- Standards Development and Verification
- Government Relations
- Technical Information Exchange

CTI Objectives

- Maintain and expand a broad base membership of individuals and organizations interested in Evaporative Heat Transfer Systems (EHTS).
- Identify and address emerging and evolving issues concerning EHTS.
- Encourage and support educational programs in various formats to enhance the capabilities and competence of the industry to realize the maximum benefit of EHTS.
- Encourage and support cooperative research to improve EHTS technology and efficiency for the long-term benefit of the environment.
- Assure acceptable minimum quality levels and performance of EHTS and their components by establishing standard specifications, guidelines, and certification programs.
- Establish standard testing and performance analysis systems and procedures for EHTS.
- Communicate with and influence governmental entities regarding the environmentally responsibletechnologies, benefits, and issues associated with EHTS.

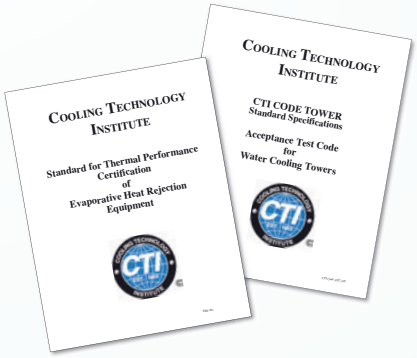

- Encourage and support forums and methods for exchanging technical information on EHTS.

Benefits to the End User

CTI defines an independent testing certification program that is specifiable, enforceable and available to all equipment manufacturer's. End users that purchase CTI certified products are assured that those products will perform thermally as specified.

Additionally CTI certification is the first step for the Green Building Concept in Europe:

- LEED - Leadership in Energy and Environmental Design
- Best Available Practice
- Green Building Rating System

Thermal Performance Guarantee

In addition to the CTI Certification, Evapco unequivocally guarantees the Thermal Performance of ALL Evapco Equipment. Every unit order is confirmed with a submittal package that includes an Evapco Thermal Performance Guarantee Certificate.

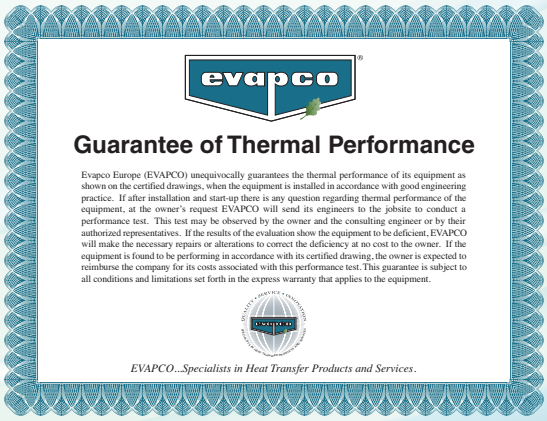

evapco

Guarantee of Thermal Performance

Evapco Europe (EVAPCO) unequivocally guarantees the thermal performance of its equipment as shown on the certified drawings, when the equipment is installed in accordance with good engineering practice. If after installation and start-up there is any question regarding thermal performance of the equipment, at the owner's request EVAPCO will send its engineers to the jobsite to conduct a performance test. This test may be observed by the owner and the consulting engineer or by their authorized representatives. If the results of the evaluation show the equipment to be deficient, EVAPCO will make the necessary repairs or alterations to correct the deficiency at no cost to the owner. If the equipment is found to be performing in accordance with its certified drawing, the owner is expected to reimburse the company for its costs associated with this performance test. This guarantee is subject to all conditions and limitations set forth in the express warranty that applies to the equipment.

EVAPCO...Specialists in Heat Transfer Products and Services.

CTI Certification Program

CTI Certification Process

- Submit Application for Certification
- CTI completes a technical review of the product line submitted
- CTI performs an initial qualification test in a laboratory on a specified model number
- CTI issues an Approval Letter with Validation Number if test is passed. Letter is also distributed to all members of CTI to inform everyone that a successfull certification has been completed. The Certification Validation Number assigned should be fixed to each tower sold and displayed in all catalogs and other literature
- Product Line must undergo an Annual Reverification Test - Different model number is selected every year
- More details can be found on the CTI website **www.cti.org**

CTI Certification Test Parameters

- Entering Wet Bulb temperature - 12.8°C to 32.2°C
- Cooling Range - Minimum of 2.2°C
- Cooling Approach - Minimum of 2.8°C
- Process Fluid Temperature - Maximum of 51.7°C
- Barometric Pressure - 91.4 to 105 kPa
- More details can be found on the CTI website **www.cti.org**

CTI Certification Limitations

- Specific manufacturer's product line name and model numbers
- Applicable only to product lines and model numbe submitted
- Multiple cell model numbers are allowed if the airflow is not affected or the configuration impact is included in the unit rating
- Optional accessories are allowed if the airflow is not affected or the accessory impact is accounted for in the rating
- More details can be found on the CTI website **www.cti.org**

Evapco Europe CTI Certified AT Product Line

AT Line of CTI Certified Cooling Towers

- CTI Certification Validation Number C13A-99R18
- Includes CE compliant fan screen
- Includes the use of side, end or bottom water inlet configuration
- Includes optional Super Low Sound Fan (SLSF)
- Includes optional pan Water Silencers (WS)
- Includes optional Low Sound Fan (LSF)
- Includes optional Discharge Attenuation
- Includes optional Offset Sound Attenuation Walls
- Includes optional Wide-Pak Fill
- Includes optional external service platform and ladders for access
- SPECTRUM Technical data sheet will state "ECC-CTI Certified Cooling Tower"
- Unit will receive a CTI and ECC Certified Shield located near the nameplate

Note

All CTI Certified Product Lines of all manufacturers with CTI certified products can be found on the website: **http://www.cti.org/certification.shtml**

Eurovent-CTI Certification

In 2007 Evapco launched the initiative to create the "European Chapter" of CTI. At the start of this initiative, Eurovent and CTI established a "Memorandum of Understanding". Since then the "Operational Manual for Certification of Cooling Towers" and the "Eurovent Rating Standard for Cooling Towers" were written. Both documents are strongly tied to the CTI documents STD 201 and ATC 105. A common **"Eurovent-CTI"** Certification program has become the European Standard for independent thermal performance rating of cooling towers. All Evapco CTI Certified cooling towers will be **Eurovent-CTI certified as from February 2012.**

EUROVENT – CTI cooperation

EUROVENT Association

Initially founded in 1958 EUROVENT Association represents the European refrigeration, air conditioning, air handling, heating and ventilation industry and trade associations from European and non-European countries. Over 1000 companies in 13 European countries, employing 150000 employees who jointly generate more than € 25 to 30 billion of annual output are member of this organization.

EUROVENT mission

EUROVENT represents, promotes and defends the industry to relevant national and international bodies and cooperates with other European umbrella associations. Over the years EUROVENT has become a well-known and respected stakeholder in all industry related matters and, in particular, in climate change and energy efficiency. EUROVENT develops product certification programs for the entire industry through the EUROVENT Certification Company.

EUROVENT Certification

The main objective of the EUROVENT Certification Company (ECC) is to certify cooling equipment (and/or components) independently from EUROVENT Association. With a common set of well-defined procedures and criteria for the rating of products, comparison of product performance ensures a healthy and solid competition on a market open to all manufacturers. When a manufacturer participates in a certification program, he has to present its list of models or model ranges together with their performance data. The files are evaluated by the ECC Certification and a predefined number of units are selected for testing by independent laboratories. If the results comply with the relevant standards, the submitted models or ranges will be listed in the EUROVENT Certification Online Directory. Models are subject to regular random testing to verify compliance with catalogue data.

Benefits

The Certification Mark guarantees specifying engineers, installers and end users that the products marketed by a participant have been submitted to independent testing and that they have been accurately rated. Through specification of certified products, the engineer's tasks become easier, since there is no need to carry out detailed comparison and performance testing.

The POWER-BAND Belt Drive System

At the heart of every Advanced Technology series cooling tower is EVAPCO's POWER-BAND Belt Drive System. Tough enough to handle the most heavy-duty cooling tower applications, it's also the easiest drive system to maintain in the industry.

Fan Motors

POWER-BAND uses premium efficiency, inverter capable, totally enclosed fan motors that are designed specifically for cooling tower applications. A broad range of additional motors, including multi-speed motors, space heaters, thermistors, and shaft grounding rings, are also available to meet your specific needs.

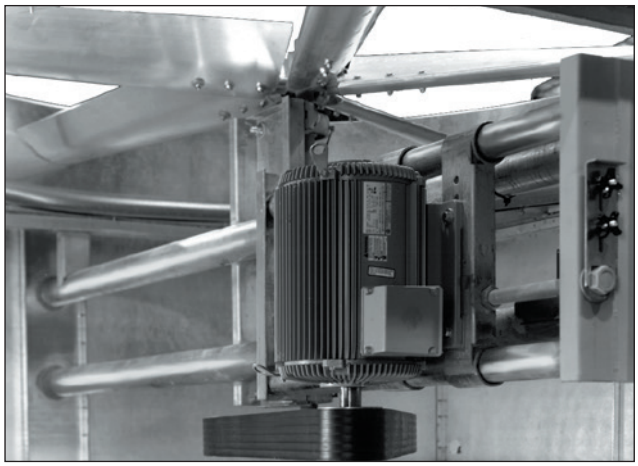

Belt Drive

Specifically designed for cooling tower service, the POWER-BAND drive is a solid-back multigroove belt system with high lateral rigidity. The belt is constructed of neoprene with polyester cords, and sized for 150% of the motor nameplate horsepower to ensure long, trouble-free operation.

Drive System Sheaves

POWER-BAND's drive system sheaves are constructed of aluminum alloy for durability inside the cooling tower's warm, moist atmosphere. Models with totally enclosed fan cooled (TEFC) motors have a steel driver sheave protected by a hinged cover.

Fan Shaft Bearings

Rated for a minimum L10 life of 75,000 hours, POWER-BAND's fan shaft bearings are the cooling tower industry's most heavy-duty pillow-block bearings. That means longer operating life and less risk of costly downtime.

The Industry's Easiest Drive-System Maintenance

With POWER-BAND, all periodic maintenance can be safely performed from the side of your Advanced Technology series cooling tower. No standing inside the cold water basin—and no need for fan deck handrails or safety cages.

Standard Towers (2.4 m Wide or Less)

The totally enclosed fan cooled (TEFC) motor is mounted on the outside and protected from the weather by a cover that swings away for maintenance. A large, hinged access door is located on the side of the unit for easy access to the fan drive system. The belt can be adjusted by tightening the j-bolts on the motor base, and tension can be checked easily through the access door. The bearing lubrication lines have been extended to the exterior casing and are located by the access door, thus making bearing lubrication easy. Sloped maintenance ladders and working platforms are available to make maintenance even easier. See page 14 for details.

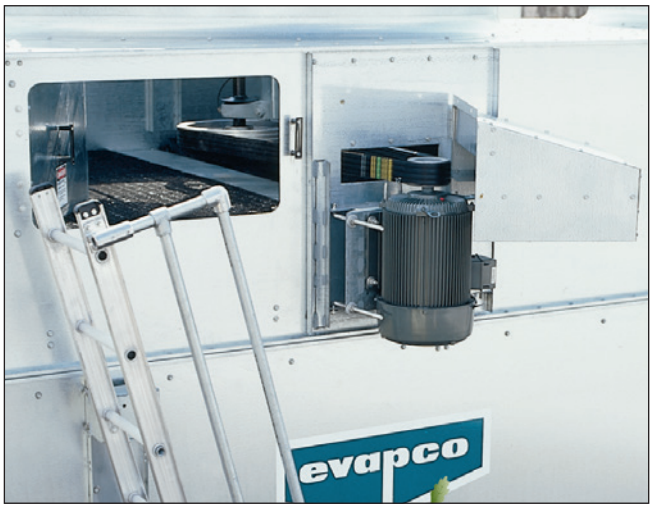

Large Towers (Over 2.4 m Wide)

The totally enclosed air over (TEAO) motor is located inside the fan casing and mounted on a unique, heavy-duty adjustable motor base that's designed to swing completely to the outside of the unit through a large, hinged access door 1.3 square meters. The belt can be easily adjusted from outside the unit via an all-thread that runs through the motor base, or via the motor base's unique locking mechanism if a wrench is not available. Bearing lubrication fittings are extended to the side of the unit inside the access door to allow for easy application of the bearing lubricant. To facilitate motor removal, an optional motor davit is available. See page 15 for details.

Worry-Free Maintenance Basin Design

The cold water basin is the most important area of a cooling tower to maintain. Dirt and debris naturally collect there as a result of the evaporation process and must be cleaned out on a regular basis. The basin section of every Advanced Technology series cooling tower is designed to allow quick and easy access—promoting routine maintenance of the cold water basin.

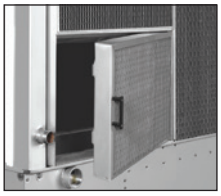

Easy Access

The cold water basin section is easily accessible from ground level by simply loosening the two quick release fasteners on the inlet louver assemblies and lifting out the lightweight louver. The basin can be accessed from all four sides of the cooling tower, and the bottom of the fill section is a minimum of 1.2 m above the basin floor. This open design enables the basin to be easily cleaned. *Note: 1.2 m-wide models are accessible on only two sides.*

Louver Access Door

To aid in basin maintenance, most Advanced Technology models can be equipped with an optional louver access door. This allows easy access to perform routine maintenance and inspection of the makeup assembly, strainer screen, and basin without removing an entire inlet louver. *Note: This feature is standard on models with louvers 1.5 m and taller and optional on models with 1.2 m tall louvers.*

Stainless Steel Strainers

For most cooling towers, the strainer is subject to excessive wear and corrosion. Not so with EVAPCO's cooling towers. Our strainers are constructed with stainless steel—a long-standing EVAPCO standard—ensuring that yours will last the life of your cooling tower.

Clean Pan Design

The Advanced Technology series also features a completely sloped basin from the upper to lower pan section. This "clean pan" design allows the water to be completely drained from the basin. The cooling tower water will drain from the upper section to the depressed lower pan section where the dirt and debris can be easily flushed out through the drain. This design helps prevent buildup of sedimentary deposits and biological films, and minimizes standing water. *Note: On 1.2 m wide units, the pan is sloped without the step.*

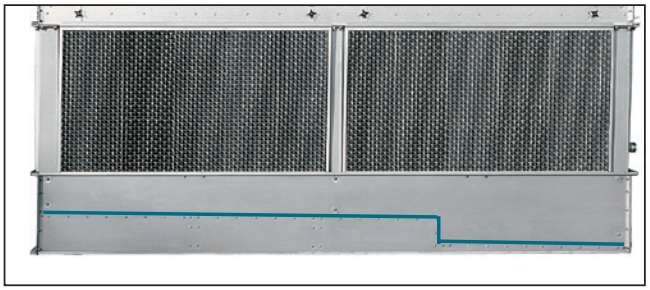

Optional Equipment

The standard design of the EVAPCO Advanced Technology series makes it the easiest cooling tower to maintain in the industry. Take your tower to the next level with a host of options that can make maintenance even easier and extend the life of your cooling tower even longer.

Sloped Maintenance Ladders

Designed by EVAPCO and OSHA-compliant, this sloped "ships type" ladder enables visual inspection of the water distribution system and drive components. What's more, all standard drive system maintenance can be performed from the ladder. A handrail is attached to the sloped ladder for safe and easy ascent and descent—no need for safety cages.

***Notes**: Available on all models wider than 1.2 m.*
A vertical ladder is available for smaller models. Ladder ships loose and must be field mounted. A safety cage is not included in this design. Check conformity with local legislation before application.

Working Platform & Ladder with Davit

Make it easy to service the fan motor and water distribution system with this heavy-duty, self-supporting working platform and standard ladder. A less expensive alternative to field erected catwalks, the system is OSHA compliant and ships in sections for easy installation. *Note: The working platform is not available on 1.2 m - wide models.*

Plus! Eliminate crane rentals with an optional davit that facilitates the easy removal of motors, gear drives, and fans. The davit is constructed of aluminum and is mounted on the side of the unit with a galvanized steel bracket. *Note: Davit ships loose and is installed in the field.*

Stainless Steel Welded Basin

The basin provides the structural support for the unit and is the most important part of you cooling tower. Maximize its protection against corrosion with EVAPCO's optional stainless steel water touch basin, which uses type 304L or type 316L stainless steel for the entire basin area, including the support columns and plenum of the cooling tower and the louver frames.

Accessori: **Resistenze Elettriche per il Bacino**

Sono disponibili resistenze elettriche ad immersione che vengono installate in fabbrica nel bacino della torre. La loro funzione è quella di mantenere l'acqua del bacino a 5°C con una temperatura esterna di -18, -28 o -40°C e sono provviste di un termostato in combinazione con un controllo di minimo livello per attivare la resistenza quando necessario e spegnerla per evitare che bruci quando questa non è immersa. Tutti i componenti sono racchiusi in involucro stagno per uso esterno. I dispositivi sono tutti disponibili alla morsettiera.

Resistenze elettriche* AT

	Dimensione box	-18°C kW	-28°C kW	-40°C kW
1-CELLA	4 x 4	2	3	4
	4 x 6	3	4	5
	4 x 9	4	5	7
	4 x 12	5	7	9
	8.5 x 6	5	7	9
	8.5 x 8	6	8	12
	8 x 9	6	9	12
	8 x 11	7	10	15
	8 x 12	(2) 4	(2) 6	(2) 8
	8 x 14	(2) 5	(2) 7	(2) 9
	10 x 12	(2) 5	(2) 8	(2) 10
	10 x 18	(2) 7	(2) 12	(2) 15
	12 x 12	(2) 6	(2) 9	(2) 12
	12 x 14	(2) 7	(2) 10	(2) 15
	12 x 18	(2) 9	(2) 15	(2) 18
	12 x 20	(2) 10	(2) 15	(3) 15
	14 x 18	(2) 10	(2) 15	(2) 20
	14 x 24	(2) 16	(3) 16	(3) 20
	14 x 26	(2) 16	(3) 16	(3) 20
2-CELLE	6 x 17	(2) 5	(2) 7	(2) 9
	8 x 17	(2) 6	(2) 8	(2) 12
	8 x 18	(2) 6	(2) 9	(2) 12
	8 x 21	(2) 7	(2) 10	(2) 15
	8 x 24	(4) 4	(4) 6	(4) 8
	8 x 28	(4) 5	(4) 7	(4) 9
	10 x 24	(4) 5	(4) 8	(4) 10
	10 x 36	(4) 7	(4) 12	(4) 15
	12 x 9	(2) 5	(2) 7	(2) 9
	12 x 24	(4) 6	(4) 9	(4) 12
	12 x 28	(4) 7	(4) 10	(4) 15
	12 x 36	(4) 9	(4) 15	(4) 18
	12 x 40	(4) 10	(4) 15	(6) 15
	14 x 36	(4) 10	(4) 15	(4) 20
	14 x 48	(4) 16	**	**
	14 x 52	(4) 16	**	**
	15 x 9	(2) 6	(2) 8	(2) 12
	16 x 11	(2) 8	(2) 12	(2) 15
	16 x 14	(4) 5	(4) 7	(4) 10
	20 x 12	(4) 5	(4) 8	(4) 10
	20 x 18	(4) 7	(4) 12	(4) 15
	24 x 18	(4) 9	(4) 15	(4) 18
	24 x 20	(4) 10	(4) 15	(4) 20
	28 x 18	(4) 10	(4) 15	(4) 20
	28 x 24	(4) 16	**	**
	28 x 26	(4) 16	**	**

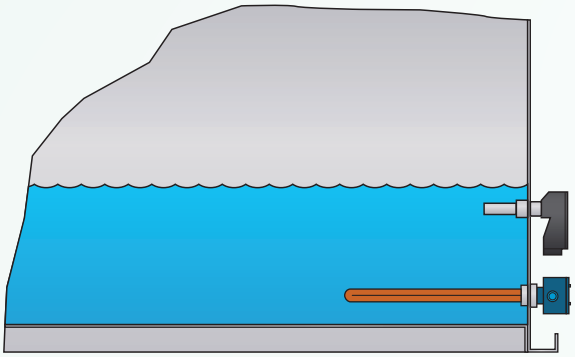

Resistenze elettriche* AT

	Dimensione box	-18°C kW	-28°C kW	-40°C kW
3-CELLE	8 x 36	(6) 4	(6) 6	(6) 8
	8 x 42	(6) 5	(6) 7	(6) 9
	10 x 36	(6) 5	(6) 8	(6) 10
	12 x 36	(6) 6	(6) 9	(6) 12
	12 x 42	(6) 7	(6) 10	(6) 15
	12 x 54	(6) 9	(6) 15	(6) 18
	12 x 60	(6) 10	(6) 15	(9) 15
	14 x 72	(6) 16	**	**
	14 x 78	(6) 16	**	**
	42 x 26	(6) 16	**	**
4-CELLE	24 x 24	(4) 12	(4) 18	(6) 15
	24 x 28	(4) 15	(4) 20	(6) 18
	24 x 36	(4) 18	(6) 18	(8) 18
	24 x 40	(4) 20	(6) 20	(8) 20
	28 x 36	(8) 10	(8) 15	(8) 20
	28 x 48	(8) 16	**	**
	28 x 52	(8) 16	**	**
	56 x 26	(8) 16	**	**

** Selezionare il riscaldatore elettrico in base alla temperatura dell'aria ambiente mostrata.* *** Consultare Evapco*

Optional Equipment

Dual Fan Option

Evapco now offers a Dual Fan arrangement on 10x18, 12x18 and 12x20 nominal box sizes. The Dual Fan option gives users redundancy in large box sizes by providing independant motors, fans, and drives that previously only had a single fan and motor.

Optional Dual Fan units will have a "-DF" at the end of the model number in Spectrum. Fan kW and weights may vary.

Electronic Water Level Control (EWLC)

Designed by and manufactured exclusively for EVAPCO, the electronic water level control system provides precision control for the basin water level and eliminates the need for field adjustment, even under varying operating conditions. The system uses heavy-duty stainless steel electrodes, which are mounted outside the unit in a vertical stand pipe that acts as a stilling chamber. (For winter operation, the stand pipe must be wrapped with electric heating cable and insulated to protect it from freezing.) Three-probe and five-probe packages are available. The five-probe package provides high- and low-level alarms. The weather-protected, slow-closing solenoid valve for the makeup water connection is factory-supplied and ready for piping to a water supply with a pressure between 50 and 1600 kPa.

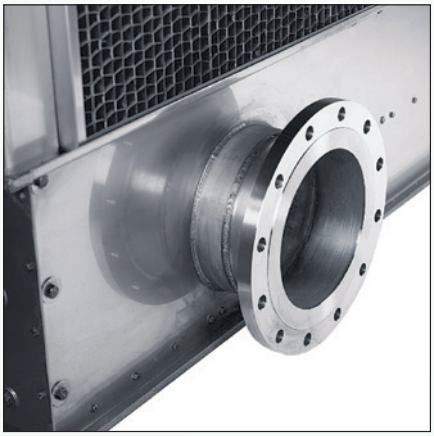

Flanged Connections

Even More Options

Ask your EVAPCO representative about:

- Fill Access Door
- Vibration switches
- Sump sweeper piping
- FM approval
- Bottom inlet and bottom suction connections
- Remote sump connections (see page 89 for more information)
- Materials for higher temperature applications
- WIDE-PAK for dirty water applications where TSS is less than 100 PPM
- VERTICLEAN for dirty water applications where TSS is between 75 and 500 PPM

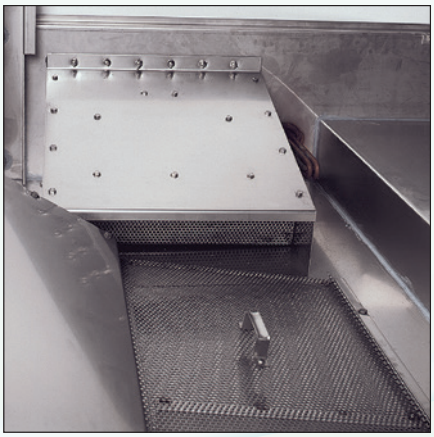

Bypass Connections with Diffuser Hood

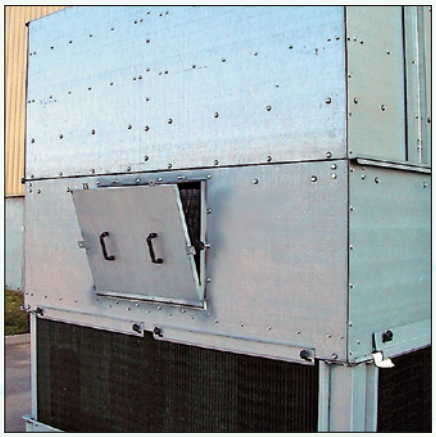

Fill Access Door

Optional Equipment: **Water Treatment Systems**

EVAPCO has dramatically changed the water treatment game with the introduction of *Pulse*~Pure® PLUS and Smart Shield®. Available as a complete water treatment system for open evaporative cooling applications. Water treatment has never been easier or more dependable.

Smart Shield®Solid Chemical Water Treatment System

Proven solid chemistry. A revolutionary feed system. Together, these make Smart Shield®, the easiest and safest chemical water treatment system available today, featuring:

- A solid chemistry design that eliminates liquid chemical hazards — including spills — and the need for expensive feed pumps
- Reduced packaging, shipping and handling for lower costs and a lower carbon footprint than liquid chemicals

Smart Shield® is available in two unique systems to protect a broad range of evaporative cooling water applications:

- Controlled Release System (right picture) uses scale and corrosion inhibitors utilizing polymer coated no-touch chemical replenishments for easier, safer reloads
- Monitored Release System (picture below) is applicable for larger systems or those with higher inhibitor demand. Monitored release scale and corrosion inhibitors utilize uncoated tablets and a direct detect probe for precise control of active ingredients

EVAPCO Smart Controller

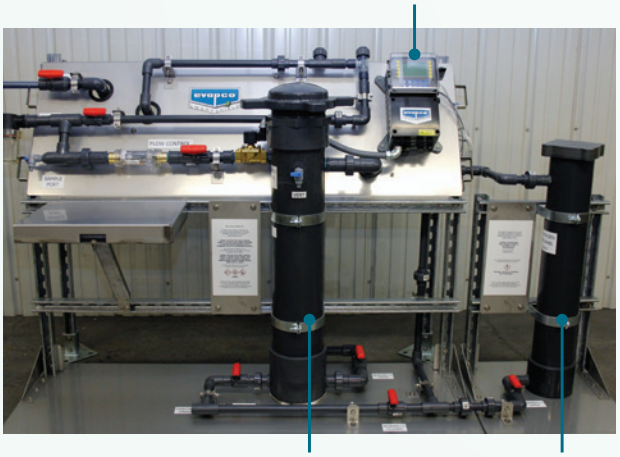

Bio-Control Feeder (BCF) CRF Feeder

Controlled Release System

Direct Detect Probe

Monitored Release System MRF Feeder

Learn more about Smart Shield® at **evapco.eu**

Optional Equipment: **Water Treatment Systems**

Warranty & Service Included

Each EVAPCO water treatment system is warranted by EVAPCO and comes standard with a one-year performance monitoring and service program provided by one of EVAPCO's factory trained water partners.

Pulse~Pure® PLUS Hybrid* Water Treatment System

Pulse~Pure® PLUS from EVAPCO uses pulsed electric field technology to treat your water. It's the environmentally responsible solution that also packs a powerful water-treating punch:

- Emits short, high frequency bursts of low energy electromagnetic fields to recirculating water
- Forms seed crystals to attract and destroy scale-causing precipitants and bacteria
- Delivers a guaranteed maximum bacterial count of 10,000 CFU**/ml in the cooling water—well below most chemical water treatment solutions
- Operates in an alkaline environment, allowing calcium carbonate to act as a natural cathodic corrosion inhibitor, and yielding corrosion rates equivalent to most chemical alternatives
- Operates at higher cycles of concentration to save water
- Compact design eliminates moving parts and ensures low energy consumption

Learn more about *Pulse*~Pure® PLUS at **evapco.eu**

Water Treatment Comparison

Parameter	Conventional Technology	Smart Shield®	*Pulse*~Pure® PLUS
Type of Water Treatment	Liquid Chemicals	Solid Chemistry	Pulsed Electric Field
Chemical Storage	💧	💧💧💧	💧💧💧💧💧
Total Cost of Ownership			
- Capital Investment	💧💧💧💧💧	💧💧💧	💧💧💧
- Minimize Maintenance	💧	💧💧💧	💧💧💧💧💧
- Low Chemical Costs	💧💧💧	💧💧💧	💧💧💧💧💧
- Reduced Water Usage	💧	💧💧💧	💧💧💧
Safety Level	💧	💧💧💧	💧💧💧💧💧
Lower Environmental Impact	💧	💧💧💧	💧💧💧💧💧
Reduced Risk Potential	💧	💧💧💧	💧💧💧💧💧

💧 Poor 💧💧💧 Good 💧💧💧💧💧 Excellent

* Additional biocide dosage is available depending on the local biocide regulation & Legionella legislation.
** Colony Forming Units

Optional Equipment: **Low Sound Solutions**

Super Low Sound Fan – 9-15 dB(A) Reduction

When you're tasked with achieving the lowest sound levels possible, there's only one choice: the EVAPCO super low sound fan, the quietest, most noise efficient fan in the industry!

Note: Not available on 1.2 m wide models.

Reduced Sound Levels

Made of heavy-duty reinforced polyester, the fan's ultra-wide chord blades have a forward swept design and rounded edges to minimize the sound caused by flow separation and vortex shedding. The end result is a sound pressure level that's 9 to 15 dB(A) lower—more than 50% lower—than standard fans (depending on specific unit selection and measurement location). Best of all, the super low sound fan has zero impact on thermal performance.

Improved Sound Quality

The super low sound fan eliminates audible blade passing frequencies typical of straight-bladed axial type fans. The narrow band spectrum graph below shows how straight-bladed axial fans produce blade-passing frequencies—the same phenomena that produce a helicopter's signature pulsating noise. The blade-passing frequencies are audible spikes in sound pressure levels, but are not apparent in the octave band sound spectrum.

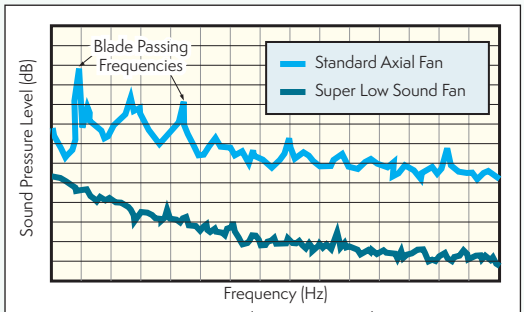

Narrow Band Spectrum Analysis

More Options for Even Greater Sound Control

The Super Low Sound Fan can be used in combination with EVAPCO's water silencers and offset sound attenuation walls to produce the lowest sound levels commercially available.

Consult EVAPCO's SPECTRUM selection software for unit sound levels (see page 24). If a detailed analysis or full octave band datasheet is required for your application, please consult your EVAPCO sales representative.

* **CTI Certified-Standard 201**
- Independently certified for guaranteed performance
- No costly field performance tests required

Water Silencer – Reduces Water Noise up to 7 dB(A)

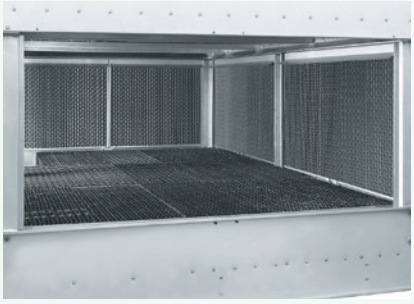

Located in the cold water basin, EVAPCO's water silencer reduces the high frequency noise associated with falling water and is capable of lowering overall sound levels 4 to 7 dB(A) when measured at 1.5 m from the side or end of the unit. When water is circulated with fans off, the results are even greater: as much as 9 to 12 dB(A) lower at the same measured distance (depending on water loading and louver height). Constructed of lightweight PVC sections, the silencer can be easily removed for access to the basin area. It will have no impact on thermal performance and is CTI certified.

Note: Not available on 1.2 m wide models.

Offset Sound Attenuation Walls

Add EVAPCO's CTI-certified offset sound attenuation walls to your super low sound fan and water silencer options for the ultimate sound control. Constructed of Z-725 galvanized steel and lined inside with acoustical padding, the walls will typically reduce the 15 m free-field sound level by an additional 3 dB(A). Stainless steel construction also available. Requires external support by others.

Note: Available only in combination with super low sound fan and water silencer.

See pages 22 and 23 for more information on EVAPCO's science of low sound.

Ventola a bassa emissione sonora – 4 - 7 dB(A) di riduzione!

La ventola a bassa emissione sonora proposta da EVAPCO prevede l'impiego di ampie pale, adatte per applicazioni particolarmente sensibili al problema della rumorosità. È costruita con pale in lega di alluminio e mozzo in acciaio. Questa ventola è in grado di ridurre i livelli di pressione sonora da 4 dB(A) a 7dB(A), in base al modello selezionato e al luogo in cui sono effettuate le misurazioni.

Le ventole sono di tipo assiale ad alta efficienza, hanno un rendimento termico fino al 3,5% e sono certificate CTI sulle unità della Serie AT. Consultare l'ufficio tecnico EVAPCO di zona per le prestazioni termiche effettive.

Pesi e altezze aggiuntivi con ventilatori a bassa emissione sonora

	Dimensione Box	Altezza Aggiuntiva per Vent. bassa emiss. (mm)	Peso operativo Aggiuntivo per Vent. bassa emiss. (kg)
1-CELLA	4 x 4	0	0
	4 x 6	0	0
	4 x 9	0	0
	4 x 12	0	0
	8.5 x 6	102	0
	8.5 x 8	102	0
	8 x 9	102	0
	8 x 11	102	0
	8 x 12	102	0
	8 x 14	102	0
	10 x 12	0	0
	10 x 18	0	0
	12 x 12	0	0
	12 x 14	0	0
	12 x 18	178	102
	12 x 20	178	102
	14 x 18	127	204
	14 x 24	127	204
	14 x 26	178	408
2-CELLE	6 x 17	102	0
	8 x 17	102	0
	8 x 18	102	0
	8 x 21	102	0
	8 x 24	102	0
	8 x 28	102	0
	10 x 24	0	0
	10 x 36	0	0
	12 x 9	102	0
	12 x 24	0	0
	12 x 28	0	0
	12 x 36	178	204
	12 x 40	178	204
	14 x 36	127	408
	14 x 48	127	408
	14 x 52	178	816

	Dimensione Box	Altezza Aggiuntiva per Vent. bassa emiss. (mm)	Peso operativo Aggiuntivo per Vent. bassa emiss. (kg)
2-CELLE	15 x 9	102	0
	16 x 11	102	0
	16 x 14	102	0
	20 x 12	0	0
	20 x 18	0	0
	24 x 18	178	204
	24 x 20	178	204
	28 x 18	127	408
	28 x 24	127	408
	28 x 26	178	816
3-CELLE	8 x 36	102	0
	8 x 42	102	0
	10 x 36	0	0
	12 x 36	0	0
	12 x 42	0	0
	12 x 54	178	306
	12 x 60	178	306
	14 x 72	127	612
	14 x 78	178	1224
	42 x 26	178	1224
4-CELLE	24 x 24	0	0
	24 x 28	0	0
	24 x 36	178	408
	24 x 40	178	408
	28 x 36	127	816
	28 x 48	127	816
	28 x 52	178	1632
	56 x 26	178	1632

Sound

Sound is the alteration in pressure, stress, particle displacement and particle velocity, which is propagated in an elastic material. Audible sound is the sensation produced at the ear by very small pressure fluctuations in the air.

Sound Pressure

Sound pressure is the intensity of sound. Sound pressure (Lp) in decibels is the ratio of measured pressure (P) in the air to a reference sound pressure, $P_O=2 \times 10^{-5}$ Pascal based on the following formula:

L_P (dB) = 10 $\log_{10}$ ($\Delta P^2/\Delta P_O^2$)

Sound pressure level is what is actually being measured when sound data is recorded. Microphones that measure sound are pressure-sensitive devices that are calibrated to convert the sound pressure waves into decibels. Similar to the intensity coming from a light bulb which gets dimmer as one gets further and further away, sound pressure decreases in decibels as your ear gets further from the sound source.

Sound Power

Sound power is the energy of sound. Sound power (Lw) in decibels is the ratio of the calculated sound power, (W) to a reference power, Wo=1 picowatt, according to the following formula:

L_W (dB) = 10 $\log_{10}$ (W/W_O)

Sound power level is not a measured value, but is calculated based on the measured sound pressure. Similar to the wattage of a light bulb that does not change the farther one is away from the light bulb, sound power does not vary with distance.

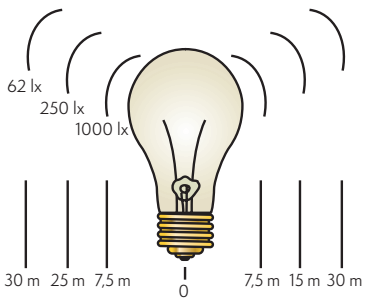

"SOUND PRESSURE"

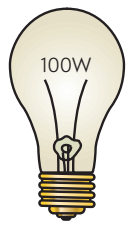

"SOUND POWER"

Adding Multiple Sound Sources

Since the decibel is a logarithmic function, the numbers are not added linearly. Therefore, two 73 dB sound sources added together do not equal 146 dB. The resultant sound would actually be 76 dB. The following table shows how to add decibels from two sound sources.

Difference in dB Level	Add to the higher dB Level
0 to 1	3
2 to 3	2
4 to 8	1
9 or greater	0

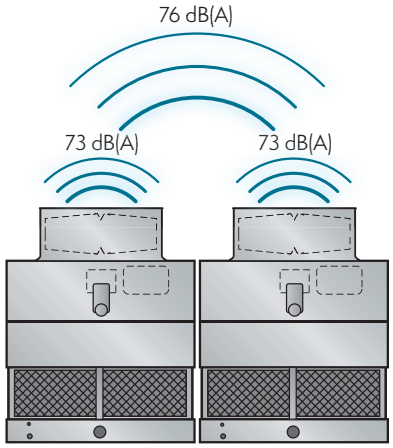

Sound Pressure – The A-Weighted Scale

The A-weighted scale, dB(A) is a means to translate what a sound microphone measures to how the human ear perceives the sound. Use the following formula and conversions:

$$dB(A) = 10 \log_{10} \sum_{f=63}^{f=8000} 10^{((dB+C_f)/10)}$$

where: C_f = correction factor per band let: $Z_f = (dB + C_f)/10$
dB = measured sound pressure

Band	Center Frequency (Hz)	Frequency Range (Hz)	Sample (dB)	C_f (dB)	Z_f
1	63	44-88	68	-26.2	4.18
2	125	89-175	76	-16.1	5.99
3	250	176-350	77	-8.6	6.84
4	500	351-700	73	-3.2	6.98
5	1000	701-1400	70	0	7.00
6	2000	1401-2800	68	+1.2	6.92
7	4000	2801-5600	71	+1.0	7.20
8	8000	5601-11200	73	-1.1	7.19

Example calculation of the dB(A) formula using the sample data.
$dB(A) = 10 \log_{10} \sum 10^{(Z_1)} + 10^{(Z_2)} + 10^{(Z_3)} + 10^{(Z_4)} + 10^{(Z_5)} + 10^{(Z_6)} + 10^{(Z_7)} + 10^{(Z_8)}$
$= 10 \log_{10} (67114245.2) = 78.3$ dB(A)

Specifying Sound

Specify sound pressure in dB(A) measured 1.5 m above the fan discharge during full speed operation.

- All manufacturers can meet a performance specification with low sound options
- Fan noise is what matters. 1.5 m above the fan is where it matters.

Measurement Location

Per Cooling Technology Institute Standard ATC-128

A sound microphone should be located 1.5 m above the cooling tower fan cowl edge at a 45° angle. This position assures accurate sound measurements and eliminates a source of uncertainty by taking the microphone out of the high velocity fan discharge air.

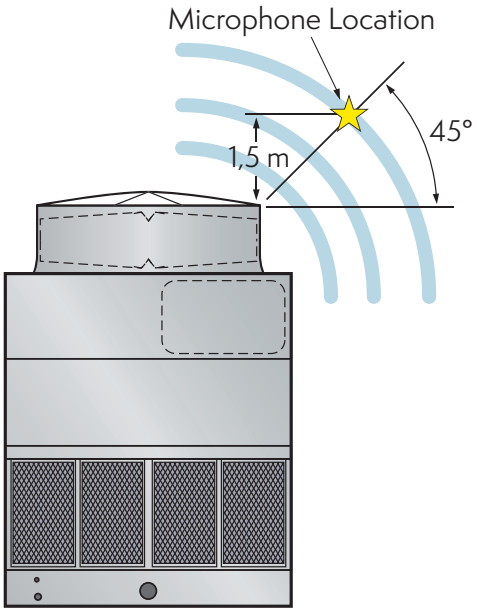

Typical Sound Pressure Levels of Well Known Noises:

Jet Airplane, 45 m away	140 dB(A)
Circular Saw	110 dB(A)
Nightclub	100 dB(A)
Semi Truck	90 dB(A)
Sidewalk of a Busy Road	80 dB(A)
Household Vacuum, 1 m away	70 dB(A)
Normal Conversation	60 dB(A)
Quiet Library	40 dB(A)

Notable Facts about Sound:

- +/- 1 dB(A) is inaudible to the human ear
- Decreasing a noise source by 10 dB(A) sounds half as loud to the human ear

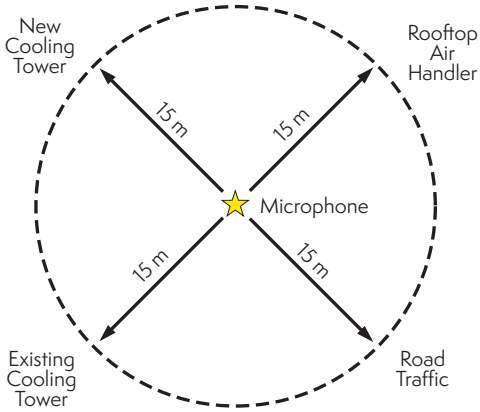

Easy Verification

At 1.5 m from the cooling tower, a sound meter records only cooling tower noise. You can easily verify the actual noise coming from the cooling tower against the specified sound data with good certainty.

If sound were specified at 15 m or some greater distance from the sound-sensitive location, there is increased uncertainty in the measured data due to other possible sound sources within the 15 m radius of the sound microphone.

Sound Quality

Sound coming from the top of the cooling tower is comprised of low- and mid-frequency fan noise. Low- and mid-frequency fan "rumble" is very difficult to attenuate. Fan rumble travels through everything and around everything and is what is audible at any sound-sensitive location.

Sound coming from the sides of the cooling tower is comprised of high-frequency water noise, is much less objectionable than fan noise, and attenuates naturally with distance.

Sound measured at the side of a cooling tower is inside the acoustical shadow of the noise emitted from the top. Outside the acoustical shadow, the low- and mid-frequency fan noise completely masks the high-frequency water noise.

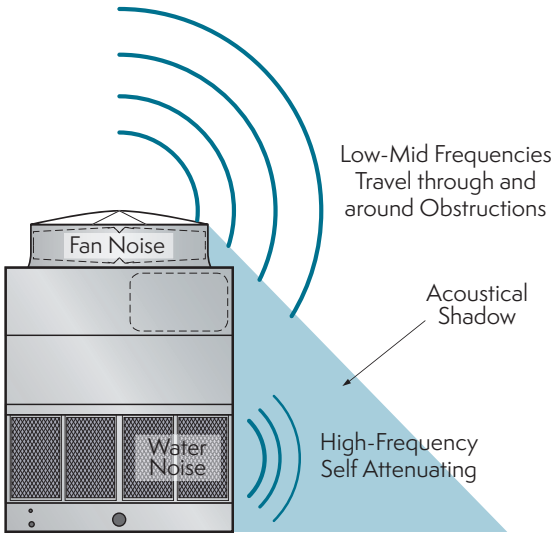

EVAPCO Technical Support Services

EVAPCO Representatives

Your EVAPCO representative is the local expert you can count on to help you with all your commercial HVAC needs—from getting quotes to answering questions to helping you manage your projects and orders. Simply contact him or her whenever you need help; we'll get the job done. To find your local representative, visit **evapco.eu** now.

SPECTRUM

SPECTRUM is a computer selection program that makes it easy for you to find and optimize the right EVAPCO solutions for every project. Evaluate thermal performance, space, and energy requirements across units; analyze optional equipment features; and generate complete specifications and unit drawings—all within a friendly and familiar Windows format. Contact your EVAPCO representative to access SPECTRUM now.

evapco.eu

Bookmark evapco.com for the latest and most complete product information. The website contains a multitude of information and resources including:

- Product catalogs
- Rigging instructions
- Operation and maintenance instructions
- Videos

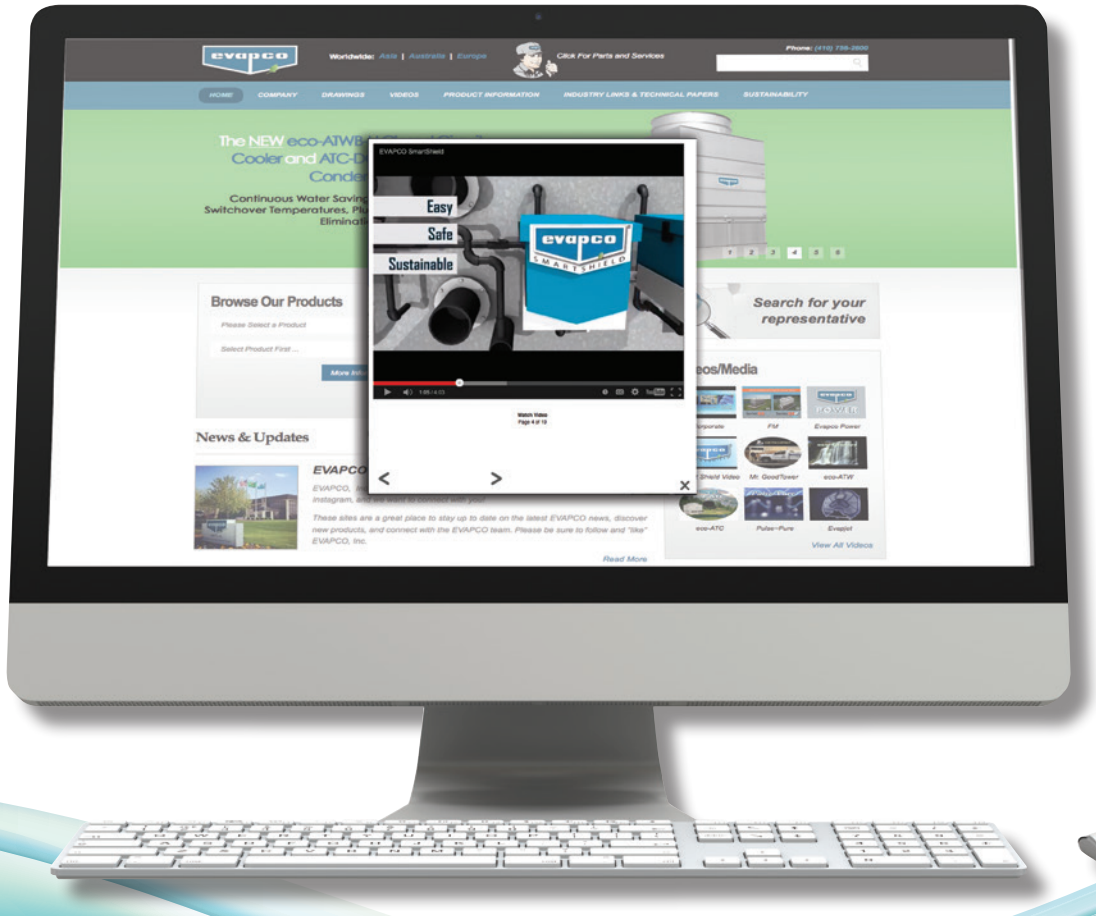

Advanced Technology Series
AT
Engineering Data & Dimensions

Nomenclature

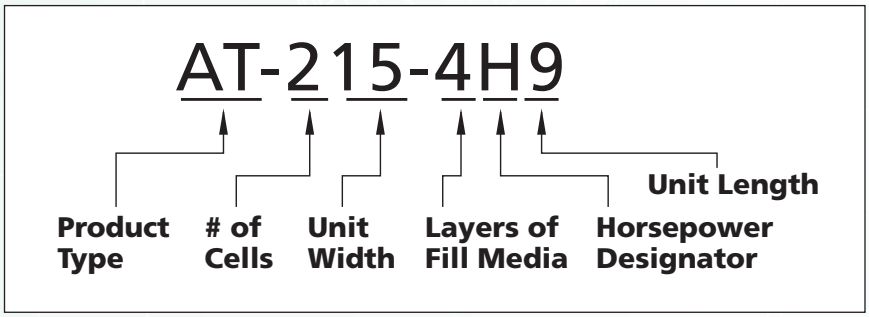

Product Type
AT – Indicates an Advanced Technology (AT) tower

# of Cells
Determined by the number of inlet connections, can be 1, 2, 3, or 4

Unit Width
The total width of the unit in feet, all cells included. The value is rounded up to the next whole number.

Layers of Fill Media
Determined by the number of 1 foot tall fill layers. Can be 2, 3, 4 or 5.

Horsepower Designator
Determined by the horsepower per fan motor. Available from E = 2 Hp to R = 100 Hp.

Unit Length
The total length of the unit in feet, all cells included. The value is rounded up to the next whole number.

Models: AT 14-2E4 to 14-3G6

One-Cell Cooling Towers

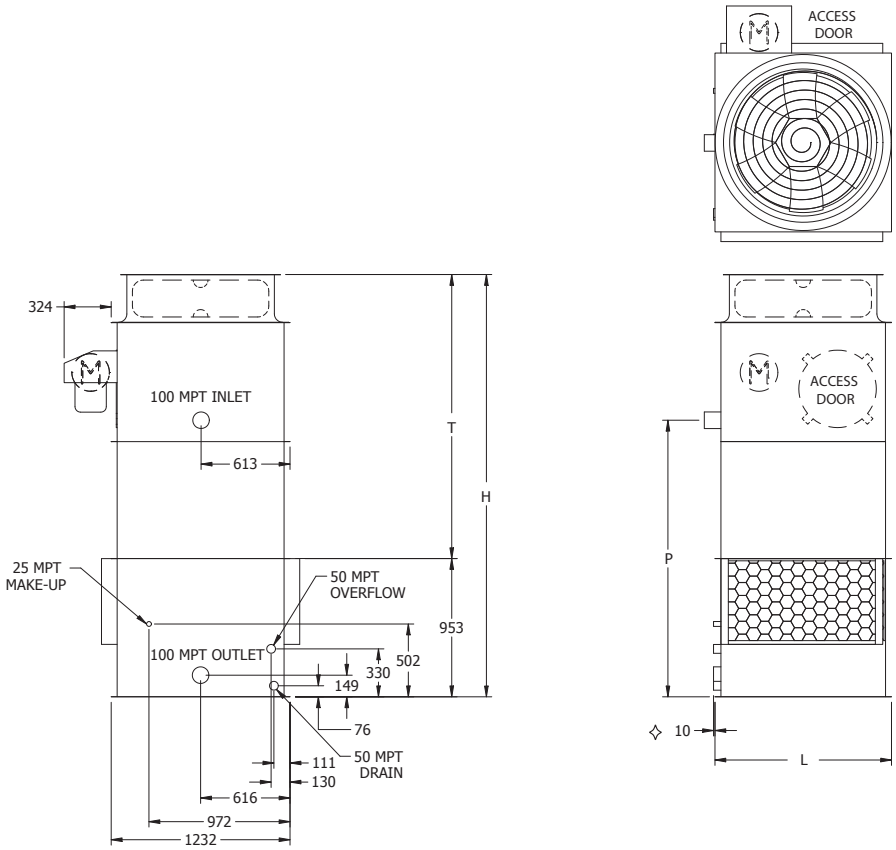

Model No.	Weights (kg)			Fan Motor (kW)	Air Flow (m^3/s)	Dimensions (mm)			
	Shipping	Operating	Heaviest Section✦			H†	T†	P	L
AT 14-2E4	490	775	330	1.5	4.5	2,908	1,956	1,905	1,216
AT 14-3E4	525	810	365	1.5	4.5	3,213	2,261	2,210	1,216
AT 14-2F4	515	800	355	2.2	5.1	2,908	1,956	1,905	1,216
AT 14-3F4	550	835	390	2.2	5.0	3,213	2,261	2,210	1,216
AT 14-2F6	630	1,095	430	2.2	7.2	2,908	1,956	1,905	1,826
AT 14-3F6	675	1,140	475	2.2	7.1	3,213	2,261	2,210	1,826
AT 14-2G6	640	1,100	440	4	8.5	2,908	1,956	1,905	1,826
AT 14-3G6	685	1,150	485	4	8.4	3,213	2,261	2,210	1,826

NOTE: (1) An adequately sized bleed line must be installed in the cooling tower system to prevent build-up of impurities in the recirculated water.
(2) Do not use catalog drawings for certified prints. Dimensions and weights are subject to change.
(3) Adequate spacing must be allowed for access to the cooling tower. Refer to EVAPCO's Equipment Layout Manual.

✧ Outlet connection extends beyond bottom flange.
† Height includes fan guard which ships factory mounted.
✦ Heaviest section is upper section.

Models: AT 14-2E9 to 14-3G12

One-Cell Cooling Towers

*14-2E9 to 14-3F9
(1) 4" Inlet
(1) 4" Outlet

*14-2F12 to 14-3G12
(1) 6" Inlet
(1) 6" Outlet

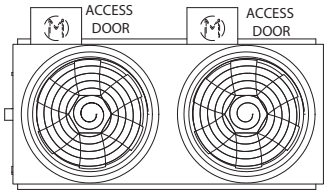

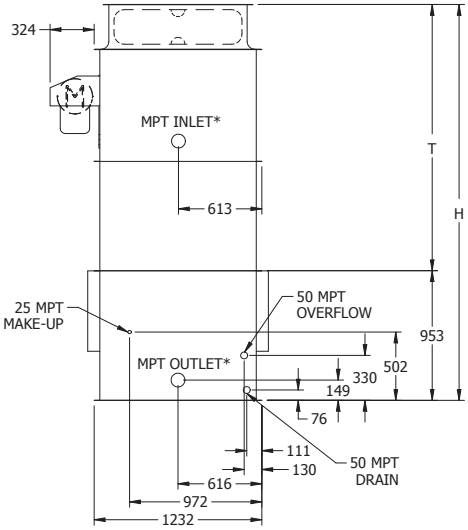

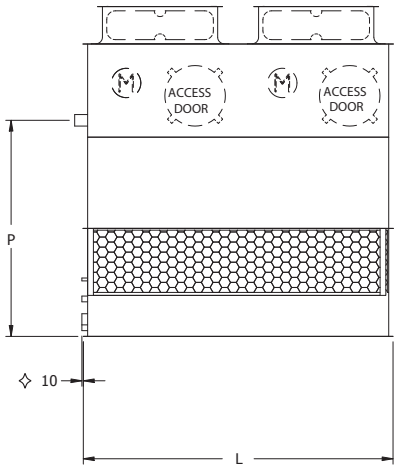

Model No.	Weights (kg)			Fan Motor (kW)	Air Flow (m^3/s)	Dimensions (mm)			
	Shipping	Operating	Heaviest Section✦			H†	T†	P	L
AT 14-2E9	905	1,610	625	(2) 1.5	10.0	2,908	1,956	1,905	2,731
AT 14-3E9	980	1,685	700	(2) 1.5	9.8	3,213	2,261	2,210	2,731
AT 14-2F9	955	1,655	670	(2) 2.2	11.4	2,908	1,956	1,905	2,731
AT 14-3F9	1,025	1,730	745	(2) 2.2	11.1	3,213	2,261	2,210	2,731
AT 14-2F12	1,150	2,110	805	(2) 2.2	14.6	2,908	1,956	1,905	3,651
AT 14-3F12	1,240	2,200	895	(2) 2.2	14.3	3,213	2,261	2,210	3,651
AT 14-2G12	1,165	2,125	820	(2) 4	17.2	2,908	1,956	1,905	3,651
AT 14-3G12	1,255	2,220	910	(2) 4	16.8	3,213	2,261	2,210	3,651

NOTE: (1) An adequately sized bleed line must be installed in the cooling tower system to prevent build-up of impurities in the recirculated water.
(2) Do not use catalog drawings for certified prints. Dimensions and weights are subject to change.
(3) Adequate spacing must be allowed for access to the cooling tower. Refer to EVAPCO's Equipment Layout Manual.

✧ Outlet connection extends beyond bottom flange.
† Height includes fan guard which ships factory mounted.
✦ Heaviest section is upper section.

Models: AT 19-2F6 to 19-4J6

One-Cell Cooling Towers

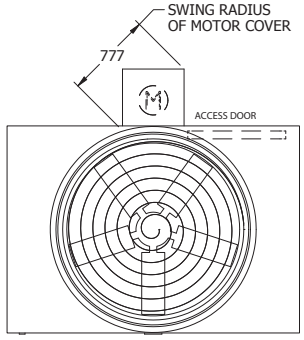

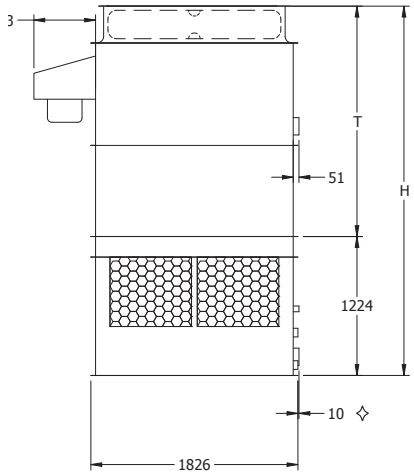

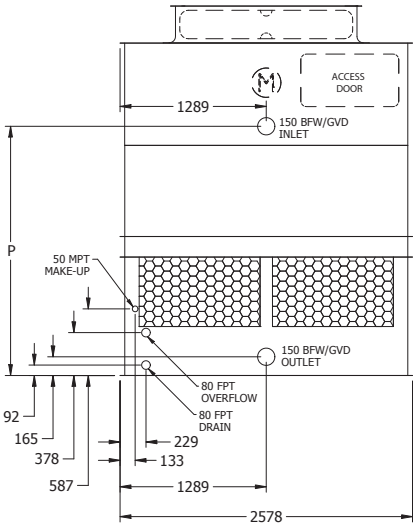

Model No,	Weights (kg)			Fan Motor (kW)	Air Flow (m^3/s)	Dimensions (mm)		
	Shipping	Operating	Heaviest Section✦			H†	T†	P
AT 19-2F6	1,395	2,320	885	2.2	10.7	3,258	2,032	2,197
AT 19-2G6	1,425	2,350	910	4	12.5	3,258	2,032	2,197
AT 19-2H6	1,440	2,370	930	5.5	14.3	3,258	2,032	2,197
AT 19-3F6	1,490	2,415	975	2.2	10.5	3,562	2,337	2,502
AT 19-3G6	1,515	2,440	1,000	4	12.3	3,562	2,337	2,502
AT 19-3H6	1,535	2,460	1,020	5.5	14.0	3,562	2,337	2,502
AT 19-3I6	1,545	2,470	1,035	7.5	15.3	3,562	2,337	2,502
AT 19-4F6	1,590	2,515	1,075	2.2	10.3	3,867	2,642	2,807
AT 19-4G6	1,615	2,540	1,100	4	12.1	3,867	2,642	2,807
AT 19-4H6	1,635	2,560	1,120	5.5	13.8	3,867	2,642	2,807
AT 19-4I6	1,645	2,570	1,135	7.5	15.1	3,867	2,642	2,807
AT 19-4J6	1,680	2,605	1,165	11	17.2	3,867	2,642	2,807
SLSF Addition*	68	68	68			330	330	

NOTE: (1) An adequately sized bleed line must be installed in the cooling tower system to prevent build-up of impurities in the recirculated water.
(2) Do not use catalog drawings for certified prints. Dimensions and weights are subject to change.
(3) Adequate spacing must be allowed for access to the cooling tower. Refer to EVAPCO's Equipment Layout Manual.

✧ Outlet connection extends beyond bottom flange.
† Height includes fan guard which ships factory mounted.
✦ Heaviest section is upper section.
* Additional weight and dimensions for optional SLSF.

Models: AT 19-2F8 to 19-4J8

One-Cell Cooling Towers

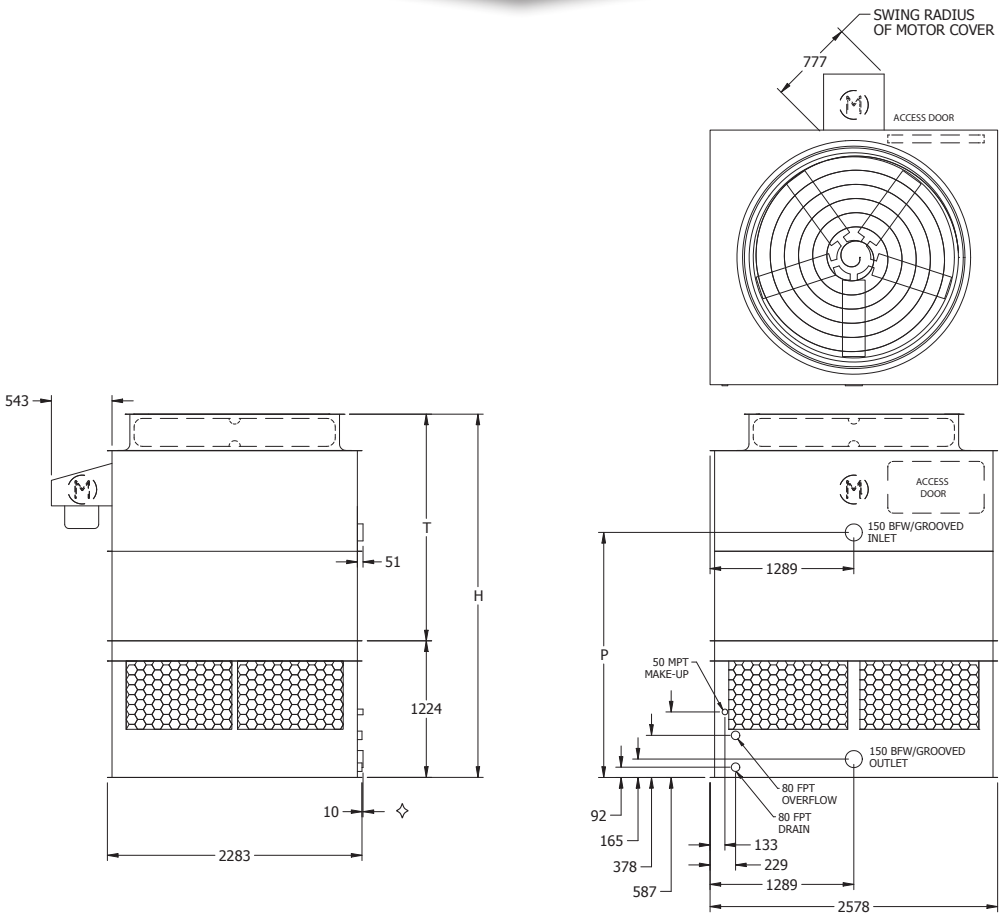

Model No.	Weights (kg)			Fan Motor (kW)	Air Flow (m^3/s)	Dimensions (mm)		
	Shipping	Operating	Heaviest Section✦			H†	T†	P
AT 19-2F8	1,585	2,680	1,005	2.2	12.6	3,258	2,032	2,197
AT 19-2G8	1,610	2,710	1,035	4	14.8	3,258	2,032	2,197
AT 19-2H8	1,630	2,725	1,050	5.5	16.8	3,258	2,032	2,197
AT 19-2I8	1,640	2,740	1,065	7.5	18.5	3,258	2,032	2,197
AT 19-3F8	1,685	2,785	1,110	2.2	12.4	3,562	2,337	2,502
AT 19-3G8	1,715	2,810	1,140	4	14.5	3,562	2,337	2,502
AT 19-3H8	1,735	2,830	1,155	5.5	16.6	3,562	2,337	2,502
AT 19-3I8	1,745	2,845	1,170	7.5	18.1	3,562	2,337	2,502
AT 19-3J8	1,810	2,910	1,195	11	20.6	3,562	2,337	2,502
AT 19-4F8	1,835	2,935	1,235	2.2	12.2	3,867	2,642	2,807
AT 19-4G8	1,855	2,955	1,260	4	14.3	3,867	2,642	2,807
AT 19-4H8	1,870	2,965	1,280	5.5	16.3	3,867	2,642	2,807
AT 19-4I8	1,775	2,870	1,295	7.5	17.8	3,867	2,642	2,807
AT 19-4J8	1,895	2,995	1,320	11	20.3	3,867	2,642	2,807
SLSF Addition*	68	68	68			432	432	

NOTE: (1) An adequately sized bleed line must be installed in the cooling tower system to prevent build-up of impurities in the recirculated water.
(2) Do not use catalog drawings for certified prints. Dimensions and weights are subject to change.
(3) Adequate spacing must be allowed for access to the cooling tower. Refer to EVAPCO's Equipment Layout Manual.

✧ Outlet connection extends beyond bottom flange.
† Height includes fan guard which ships factory mounted.
✦ Heaviest section is upper section.
* Additional weight and dimensions for optional SLSF.

Models: AT 18-2G9 to 18-5K9T

One-Cell Cooling Towers

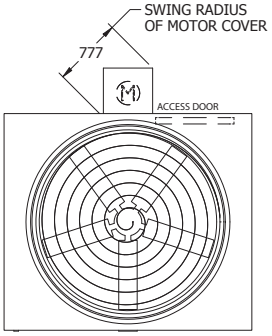

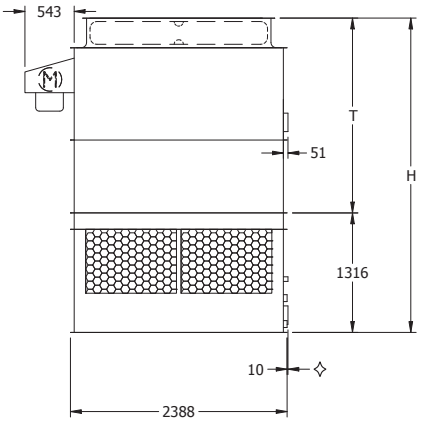

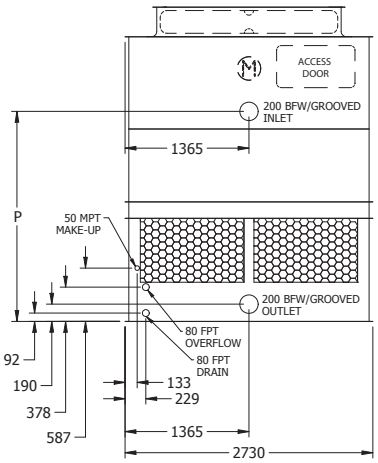

Model No.	Weights (kg)			Fan Motor (kW)	Air Flow (m^3/s)	Dimensions (mm)		
	Shipping	Operating	Heaviest Section✦			H†	T†	P
AT 18-2G9	1,760	2,980	1,210	4	16.9	3,464	2,146	2,315
AT 18-2H9	1,780	3,000	1,230	5.5	19.3	3,464	2,146	2,315
AT 18-2I9	1,790	3,010	1,245	7.5	21.1	3,464	2,146	2,315
AT 18-2J9	1,825	3,045	1,275	11	24.0	3,464	2,146	2,315
AT 18-3G9	1,875	3,095	1,335	4	16.7	3,769	2,451	2,619
AT 18-3H9	1,890	3,110	1,350	5.5	18.9	3,769	2,451	2,619
AT 18-3I9	1,905	3,125	1,365	7.5	20.7	3,769	2,451	2,619
AT 18-3J9	1,935	3,155	1,395	11	23.5	3,769	2,451	2,619
AT 18-3K9	1,960	3,180	1,330	15	24.2	3,769	2,451	2,619
AT 18-4G9	2,000	3,220	1,475	4	16.4	4,074	2,756	2,924
AT 18-4H9	2,020	3,240	1,490	5.5	18.6	4,074	2,756	2,924
AT 18-4I9	2,030	3,250	1,505	7.5	20.4	4,074	2,756	2,924
AT 18-4J9	2,065	3,285	1,540	11	23.1	4,074	2,756	2,924
AT 18-4K9	2,085	3,305	1,560	15	25.3	4,074	2,756	2,924
AT 18-4G9T	2,040	3,260	1,370	4	15.67	4,378	2,756	3,229
AT 18-4H9T	2,060	3,280	1,390	5.5	17.79	4,378	2,756	3,229
AT 18-4I9T	2,075	3,295	1,400	7.5	19.49	4,378	2,756	3,229
AT 18-4J9T	2,105	3,325	1,435	11	22.09	4,378	2,756	3,229
AT 18-4K9T	2,125	3,350	1,455	15	24.21	4,378	2,756	3,229
AT 18-5G9T	2,175	3,395	1,505	4	15.39	4,683	3,061	3,534
AT 18-5H9T	2,195	3,415	1,525	5.5	17.46	4,683	3,061	3,534
AT 18-5I9T	2,210	3,430	1,540	7.5	19.16	4,683	3,061	3,534
AT 18-5J9T	2,240	3,460	1,570	11	21.76	4,683	3,061	3,534
AT 18-5K9T	2,265	3,485	1,590	15	23.79	4,683	3,061	3,534
SLSF Addition*	-	-	-			738	738	

NOTE: (1) An adequately sized bleed line must be installed in the cooling tower system to prevent build-up of impurities in the recirculated water.
(2) Do not use catalog drawings for certified prints. Dimensions and weights are subject to change.
(3) Adequate spacing must be allowed for access to the cooling tower. Refer to EVAPCO's Equipment Layout Manual.
(4) For 4 layers additional height is 738 mm and fan coil is removable for transport.

✧ Outlet connection extends beyond bottom flange.
† Height includes fan guard which ships factory mounted.
✦ Heaviest section is upper section.

Models: AT 18-2H11 to 18-5K11T

One-Cell Cooling Towers

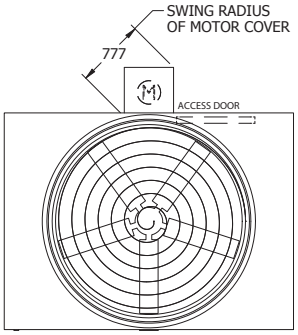

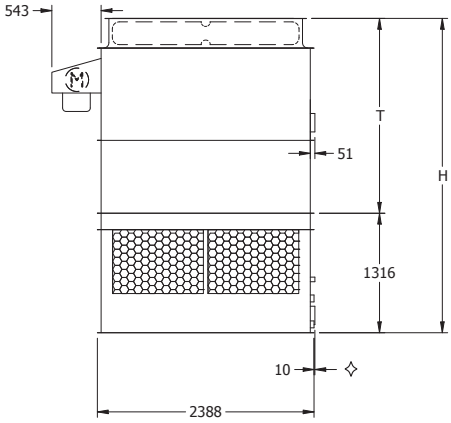

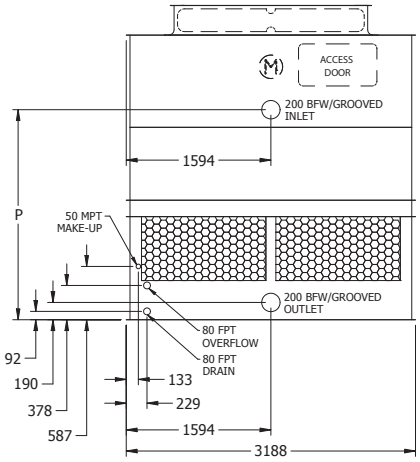

Model No.	Weights (kg)			Fan Motor (kW)	Air Flow (m^3/s)	Dimensions (mm)		
	Shipping	Operating	Heaviest Section✦			H†	T†	P
AT 18-2H11	2,010	3,425	1,310	5.5	20.4	3,464	2,146	2,315
AT 18-2I11	2,025	3,440	1,325	7.5	22.4	3,464	2,146	2,315
AT 18-2J11	2,055	3,470	1,355	11	25.4	3,464	2,146	2,315
AT 18-2K11	2,075	3,495	1,380	15	27.8	3,464	2,146	2,315
AT 18-3H11	2,140	3,555	1,440	5.5	20.1	3,769	2,451	2,619
AT 18-3I11	2,155	3,570	1,455	7.5	21.9	3,769	2,451	2,619
AT 18-3J11	2,185	3,600	1,490	11	24.9	3,769	2,451	2,619
AT 18-3K11	2,210	3,625	1,510	15	27.3	3,769	2,451	2,619
AT 18-4H11	2,290	3,705	1,590	5.5	19.7	4,074	2,756	2,924
AT 18-4I11	2,305	3,720	1,605	7.5	21.6	4,074	2,756	2,924
AT 18-4J11	2,335	3,750	1,635	11	24.5	4,074	2,756	2,924
AT 18-4K11	2,360	3,775	1,660	15	26.9	4,074	2,756	2,924
AT 18-4H11T	2,335	3,750	1,590	5.5	20.10	4,378	2,756	3,229
AT 18-4I11T	2,350	3,765	1,605	7.5	21.99	4,378	2,756	3,229
AT 18-4J11T	2,380	3,795	1,635	11	25.01	4,378	2,756	3,229
AT 18-4K11T	2,405	3,820	1,660	15	27.33	4,378	2,756	3,229
AT 18-5H11T	2,490	3,905	1,745	5.5	19.77	4,683	3,061	3,534
AT 18-5I11T	2,505	3,920	1,760	7.5	21.66	4,683	3,061	3,534
AT 18-5J11T	2,535	3,950	1,790	11	24.59	4,683	3,061	3,534
AT 18-5K11T	2,560	3,975	1,815	15	26.90	4,683	3,061	3,534
SLSF Addition*	-	-	-			738	738	

NOTE: (1) An adequately sized bleed line must be installed in the cooling tower system to prevent build-up of impurities in the recirculated water.
(2) Do not use catalog drawings for certified prints. Dimensions and weights are subject to change.
(3) Adequate spacing must be allowed for access to the cooling tower. Refer to EVAPCO's Equipment Layout Manual.
(4) For 4 layers additional height is 738 mm and fan coil is removable for transport.

✧ Outlet connection extends beyond bottom flange.
† Height includes fan guard which ships factory mounted.
✦ Heaviest section is upper section.

Models: AT 18-2H12 to 18-5L12T

One-Cell Cooling Towers

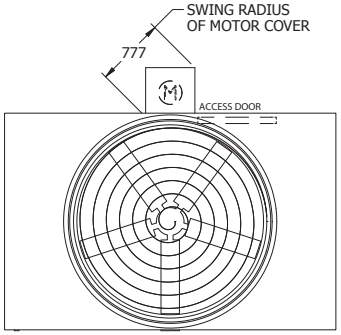

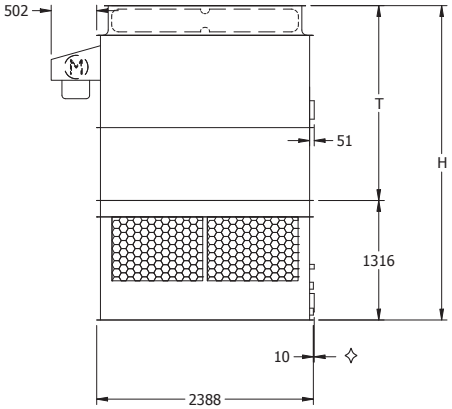

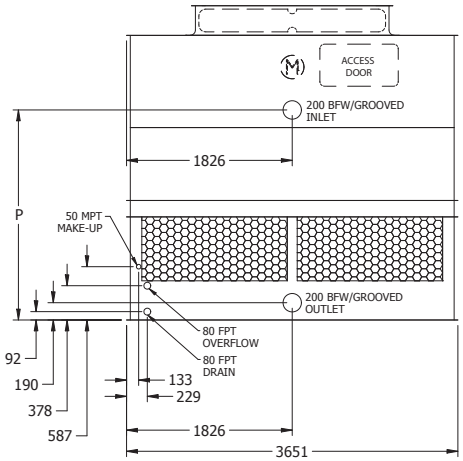

Model No.	Weights (kg)			Fan Motor (kW)	Air Flow (m^3/s)	Dimensions (mm)		
	Shipping	Operating	Heaviest Section✦			H†	T†	P
AT 18-2H12	2,200	3,850	1,440	5.5	22.7	3,464	2,146	2,315
AT 18-2I12	2,215	3,865	1,455	7.5	24.9	3,464	2,146	2,315
AT 18-2J12	2,245	3,895	1,490	11	28.3	3,464	2,146	2,315
AT 18-2K12	2,270	3,920	1,510	15	31.0	3,464	2,146	2,315
AT 18-3H12	2,350	4,000	1,590	5.5	22.4	3,769	2,451	2,619
AT 18-3I12	2,365	4,015	1,605	7.5	24.5	3,769	2,451	2,619
AT 18-3J12	2,395	4,045	1,635	11	27.8	3,769	2,451	2,619
AT 18-3K12	2,420	4,070	1,660	15	30.4	3,769	2,451	2,619
AT 18-3L12	2,430	4,080	1,675	18.5	32.7	3,769	2,451	2,619
AT 18-4H12	2,515	4,165	1,755	5.5	21.9	4,074	2,756	2,924
AT 18-4I12	2,525	4,180	1,770	7.5	24.0	4,074	2,756	2,924
AT 18-4J12	2,560	4,210	1,800	11	27.3	4,074	2,756	2,924
AT 18-4K12	2,580	4,230	1,825	15	29.9	4,074	2,756	2,924
AT 18-4L12	2,595	4,245	1,835	18.5	32.1	4,074	2,756	2,924
AT 18-4H12T	2,560	4,210	1,755	5.5	22.37	4,378	2,756	3,229
AT 18-4I12T	2,575	4,225	1,770	7.5	24.49	4,378	2,756	3,229
AT 18-4J12T	2,605	4,255	1,800	11	27.84	4,378	2,756	3,229
AT 18-4K12T	2,630	4,280	1,825	15	30.49	4,378	2,756	3,229
AT 18-4L12T	2,640	4,295	1,835	18.5	32.71	4,378	2,756	3,229
AT 18-5H12T	2,735	4,385	1,930	5.5	22.04	4,683	3,061	3,534
AT 18-5I12T	2,745	4,400	1,940	7.5	24.12	4,683	3,061	3,534
AT 18-5J12T	2,780	4,430	1,975	11	27.37	4,683	3,061	3,534
AT 18-5K12T	2,800	4,450	1,995	15	29.97	4,683	3,061	3,534
AT 18-5L12T	2,815	4,465	2,010	18.5	32.14	4,683	3,061	3,534
SLSF Addition*	-	-	-			738	738	

NOTE: (1) An adequately sized bleed line must be installed in the cooling tower system to prevent build-up of impurities in the recirculated water.
(2) Do not use catalog drawings for certified prints. Dimensions and weights are subject to change.
(3) Adequate spacing must be allowed for access to the cooling tower. Refer to EVAPCO's Equipment Layout Manual.
(4) For 4 layers additional height is 738 mm and fan coil is removable for transport.

✧ Outlet connection extends beyond bottom flange.
† Height includes fan guard which ships factory mounted.
✦ Heaviest section is upper section.

Models: AT 18-2H14 to 18-5M14T

One-Cell Cooling Towers

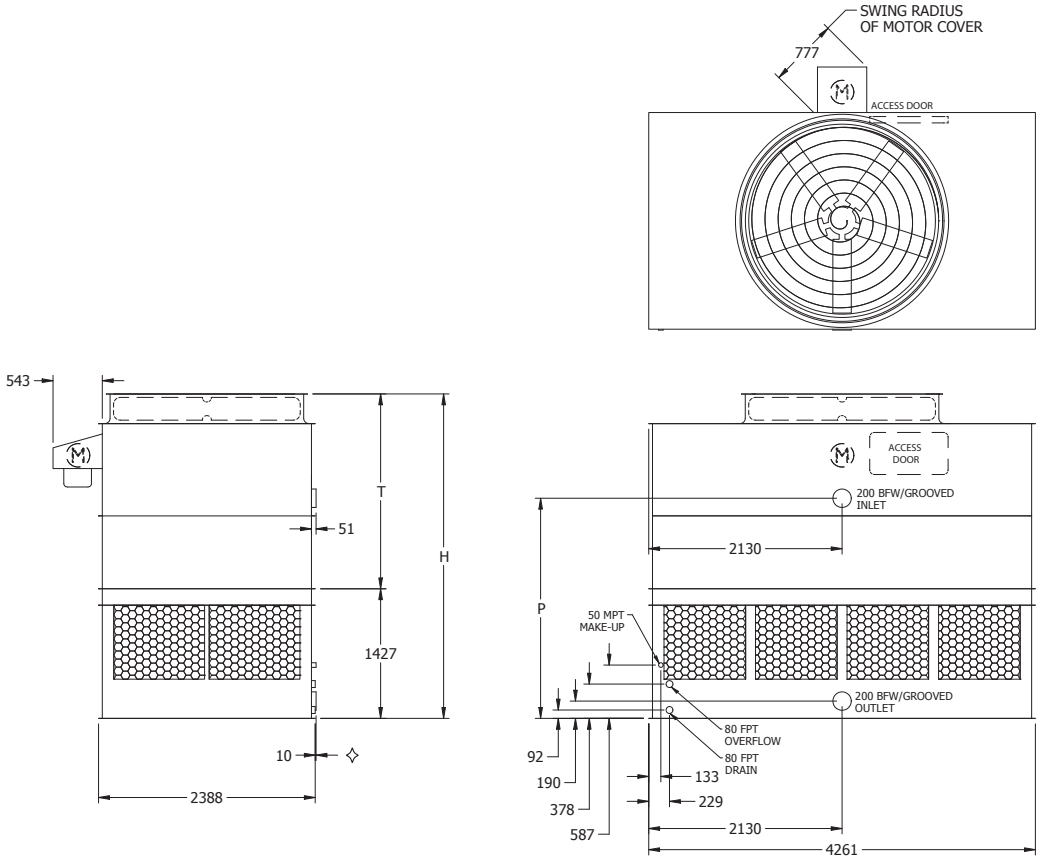

Model No.	Weights (kg)			Fan Motor (kW)	Air Flow (m^3/s)	Dimensions (mm)		
	Shipping	Operating	Heaviest Section✦			H†	T†	P
AT 18-2H14	2,445	4,380	1,545	5.5	24.8	3,575	2,146	2,426
AT 18-2I14	2,460	4,395	1,560	7.5	27.2	3,575	2,146	2,426
AT 18-2J14	2,490	4,425	1,590	11	30.9	3,575	2,146	2,426
AT 18-2K14	2,515	4,450	1,615	15	33.8	3,575	2,146	2,426
AT 18-2L14	2,525	4,465	1,630	18.5	36.3	3,575	2,146	2,426
AT 18-3H14	2,615	4,555	1,720	5.5	24.4	3,880	2,451	2,731
AT 18-3I14	2,630	4,570	1,735	7.5	26.7	3,880	2,451	2,731
AT 18-3J14	2,665	4,600	1,765	11	30.4	3,880	2,451	2,731
AT 18-3K14	2,685	4,620	1,785	15	33.2	3,880	2,451	2,731
AT 18-3L14	2,700	4,635	1,800	18.5	35.6	3,880	2,451	2,731
AT 18-3M14	2,710	4,645	1,810	22	37.8	3,880	2,451	2,731
AT 18-4H14	2,805	4,740	1,905	5.5	24.0	4,185	2,756	3,035
AT 18-4I14	2,815	4,755	1,920	7.5	26.2	4,185	2,756	3,035
AT 18-4J14	2,850	4,785	1,950	11	29.9	4,185	2,756	3,035
AT 18-4K14	2,870	4,810	1,975	15	32.7	4,185	2,756	3,035
AT 18-4L14	2,885	4,820	1,985	18.5	35.0	4,185	2,756	3,035
AT 18-4M14	2,895	4,830	1,995	22	37.1	4,185	2,756	3,035
AT 18-4H14T	2,855	4,790	1,905	5.5	24.40	4,489	2,756	3,340
AT 18-4I14T	2,865	4,805	1,920	7.5	26.76	4,489	2,756	3,340
AT 18-4J14T	2,900	4,835	1,950	11	30.44	4,489	2,756	3,340
AT 18-4K14T	2,920	4,860	1,975	15	33.32	4,489	2,756	3,340
AT 18-4L14T	2,935	4,870	1,985	18.5	35.68	4,489	2,756	3,340
AT 18-4M14T	2,945	4,880	1,995	22	37.80	4,489	2,756	3,340
AT 18-5H14T	3,050	4,985	2,100	5.5	24.02	4,794	3,061	3,645
AT 18-5I14T	3,065	5,000	2,115	7.5	26.33	4,794	3,061	3,645
AT 18-5J14T	3,095	5,035	2,150	11	29.92	4,794	3,061	3,645
AT 18-5K14T	3,120	5,055	2,170	15	32.75	4,794	3,061	3,645
AT 18-5L14T	3,130	5,070	2,185	18.5	35.11	4,794	3,061	3,645
AT 18-5M14T	3,140	5,080	2,195	22	37.19	4,794	3,061	3,645
SLSF Addition*	-	-	-			738	738	

NOTE: (1) An adequately sized bleed line must be installed in the cooling tower system to prevent build-up of impurities in the recirculated water.
(2) Do not use catalog drawings for certified prints. Dimensions and weights are subject to change.
(3) Adequate spacing must be allowed for access to the cooling tower. Refer to EVAPCO's Equipment Layout Manual.
(4) For 4 layers additional height is 738 mm and fan coil is removable for transport.

✧ Outlet connection extends beyond bottom flange.
† Height includes fan guard which ships factory mounted.
✦ Heaviest section is upper section.

Models: AT 110-2I12 to 110-5N12T

One-Cell Cooling Towers

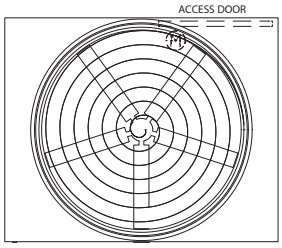

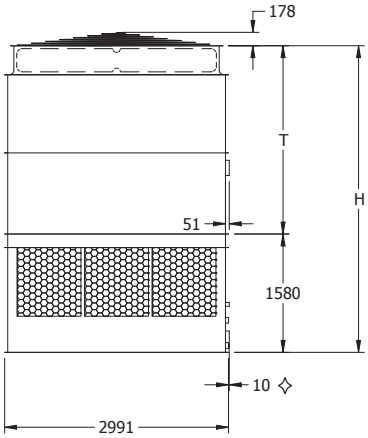

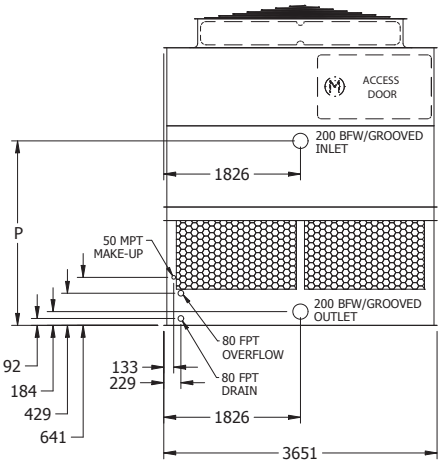

Model No.	Weights (kg)			Fan Motor (kW)	Air Flow (m^3/s)	Dimensions (mm)		
	Shipping	Operating	Heaviest Section✦			H†	T†	P
AT 110-2I12	3,005	5,255	1,905	7.5	30.5	4,096	2,515	2,464
AT 110-2J12	3,035	5,285	1,935	11	34.7	4,096	2,515	2,464
AT 110-2K12	3,055	5,305	1,960	15	38.0	4,096	2,515	2,464
AT 110-2L12	3,080	5,330	1,980	18.5	40.8	4,096	2,515	2,464
AT 110-2M12	3,125	5,375	2,030	22	43.3	4,096	2,515	2,464
AT 110-3I12	3,220	5,470	2,125	7.5	30.1	4,401	2,819	2,769
AT 110-3J12	3,250	5,500	2,155	11	34.1	4,401	2,819	2,769
AT 110-3K12	3,275	5,525	2,175	15	37.3	4,401	2,819	2,769
AT 110-3L12	3,300	5,545	2,200	18.5	40.1	4,401	2,819	2,769
AT 110-3M12	3,345	5,595	2,245	22	42.4	4,401	2,819	2,769
AT 110-4I12	3,410	5,660	2,315	7.5	29.6	4,705	3,124	3,073
AT 110-4J12	3,445	5,695	2,345	11	33.6	4,705	3,124	3,073
AT 110-4K12	3,465	5,715	2,370	15	36.8	4,705	3,124	3,073
AT 110-4L12	3,490	5,740	2,390	18.5	39.5	4,705	3,124	3,073
AT 110-4M12	3,535	5,785	2,435	22	41.8	4,705	3,124	3,073
AT 110-4N12	3,645	5,895	2,550	26	43.8	4,705	3,124	3,073
AT 110-4I12T	3,460	5,710	2,315	7.5	30.16	5,010	3,124	3,378
AT 110-4J12T	3,495	5,740	2,345	11	34.22	5,010	3,124	3,378
AT 110-4K12T	3,515	5,765	2,370	15	37.47	5,010	3,124	3,378
AT 110-4L12T	3,540	5,790	2,390	18.5	40.21	5,010	3,124	3,378
AT 110-4M12T	3,585	5,835	2,435	22	42.57	5,010	3,124	3,378
AT 110-4N12T	3,695	5,945	2,550	26	44.65	5,010	3,124	3,378
AT 110-5I12T	3,665	5,915	2,520	7.5	29.64	5,315	3,429	3,683
AT 110-5J12T	3,700	5,950	2,550	11	33.65	5,315	3,429	3,683
AT 110-5K12T	3,720	5,970	2,575	15	36.86	5,315	3,429	3,683
AT 110-5L12T	3,745	5,995	2,595	18.5	39.55	5,315	3,429	3,683
AT 110-5M12T	3,790	6,040	2,640	22	41.86	5,315	3,429	3,683
AT 110-5N12T	3,905	6,155	2,755	26	43.89	5,315	3,429	3,683
SLSF Addition*	318	318	318			546	546	

NOTE: (1) An adequately sized bleed line must be installed in the cooling tower system to prevent build-up of impurities in the recirculated water.
(2) Do not use catalog drawings for certified prints. Dimensions and weights are subject to change.
(3) Adequate spacing must be allowed for access to the cooling tower. Refer to EVAPCO's Equipment Layout Manual.

✧ Outlet connection extends beyond bottom flange.
† Height includes fan guard which ships factory mounted.
✦ Heaviest section is upper section.
* Additional weight and dimensions for optional SLSF.

Models: AT 110-2I18 to 110-5N18T

One-Cell Cooling Towers

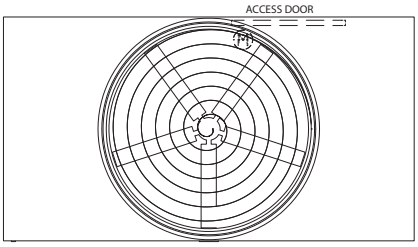

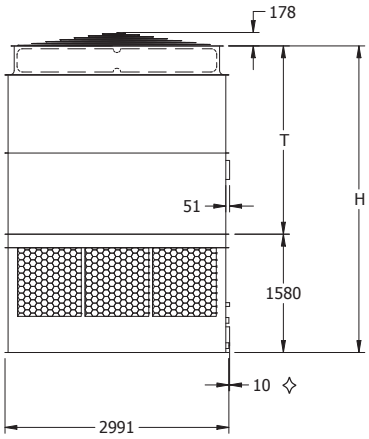

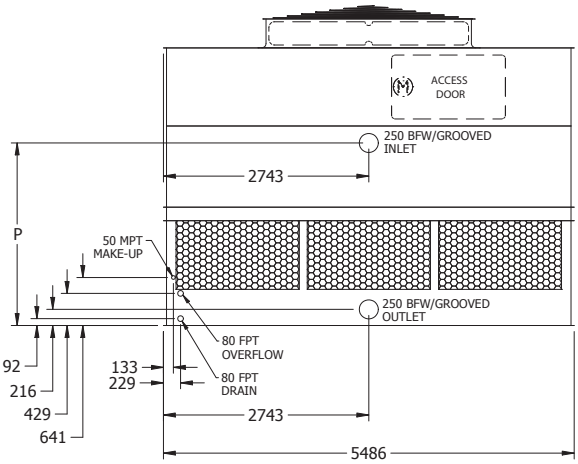

Model No.	Weights (kg)			Fan Motor (kW)	Air Flow (m^3/s)	Dimensions (mm)		
	Shipping	Operating	Heaviest Section✦			H†	T†	P
AT 110-2I18	4,170	7,615	2,560	7.5	40.6	4,096	2,515	2,438
AT 110-2J18	4,200	7,650	2,590	11	46.2	4,096	2,515	2,438
AT 110-2K18	4,225	7,670	2,615	15	50.6	4,096	2,515	2,438
AT 110-2L18	4,245	7,695	2,635	18.5	54.3	4,096	2,515	2,438
AT 110-2M18	4,290	7,740	2,680	22	57.6	4,096	2,515	2,438
AT 110-3I18	4,480	7,930	2,870	7.5	40.0	4,401	2,819	2,743
AT 110-3J18	4,515	7,960	2,905	11	45.4	4,401	2,819	2,743
AT 110-3K18	4,535	7,985	2,925	15	49.8	4,401	2,819	2,743
AT 110-3L18	4,560	8,005	2,950	18.5	53.4	4,401	2,819	2,743
AT 110-3M18	4,605	8,050	2,995	22	56.5	4,401	2,819	2,743
AT 110-3N18	4,715	8,165	3,105	30	61.9	4,401	2,819	2,743
AT 110-4I18	4,765	8,215	3,155	7.5	39.3	4,705	3,124	3,048
AT 110-4J18	4,800	8,245	3,190	11	44.7	4,705	3,124	3,048
AT 110-4K18	4,820	8,270	3,210	15	49.0	4,705	3,124	3,048
AT 110-4L18	4,845	8,290	3,235	18.5	52.5	4,705	3,124	3,048
AT 110-4M18	4,890	8,335	3,280	22	55.6	4,705	3,124	3,048
AT 110-4N18	5,005	8,450	3,395	30	60.9	4,705	3,124	3,048
AT 110-4I18T	4,835	8,285	3,155	7.5	40.07	5,010	3,124	3,353
AT 110-4J18T	4,865	8,315	3,190	11	45.54	5,010	3,124	3,353
AT 110-4K18T	4,890	8,335	3,210	15	49.88	5,010	3,124	3,353
AT 110-4L18T	4,910	8,360	3,235	18.5	53.57	5,010	3,124	3,353
AT 110-4M18T	4,960	8,405	3,280	22	56.73	5,010	3,124	3,353
AT 110-4N18T	5,070	8,520	3,395	30	62.06	5,010	3,124	3,353
AT 110-5I18T	5,130	8,575	3,450	7.5	39.45	5,315	3,429	3,658
AT 110-5J18T	5,160	8,605	3,480	11	44.84	5,315	3,429	3,658
AT 110-5K18T	5,180	8,630	3,505	15	49.13	5,315	3,429	3,658
AT 110-5L18T	5,205	8,650	3,525	18.5	52.72	5,315	3,429	3,658
AT 110-5M18T	5,250	8,700	3,570	22	55.78	5,315	3,429	3,658
AT 110-5N18T	5,365	8,810	3,685	30	61.02	5,315	3,429	3,658
SLSF Addition*	318	318	318			546	546	

NOTE: (1) An adequately sized bleed line must be installed in the cooling tower system to prevent build-up of impurities in the recirculated water.
(2) Do not use catalog drawings for certified prints. Dimensions and weights are subject to change.
(3) Adequate spacing must be allowed for access to the cooling tower. Refer to EVAPCO's Equipment Layout Manual.
(4) Optional Dual Fan units will have a "-DF" at the end of the model number in Spectrum. Fan kW and weights may vary.

✧ Outlet connection extends beyond bottom flange.
† Height includes fan guard which ships factory mounted.
✦ Heaviest section is upper section.
* Additional weight and dimensions for optional SLSF.

Models: AT 112-2I12 to 112-5N12T

One-Cell Cooling Towers

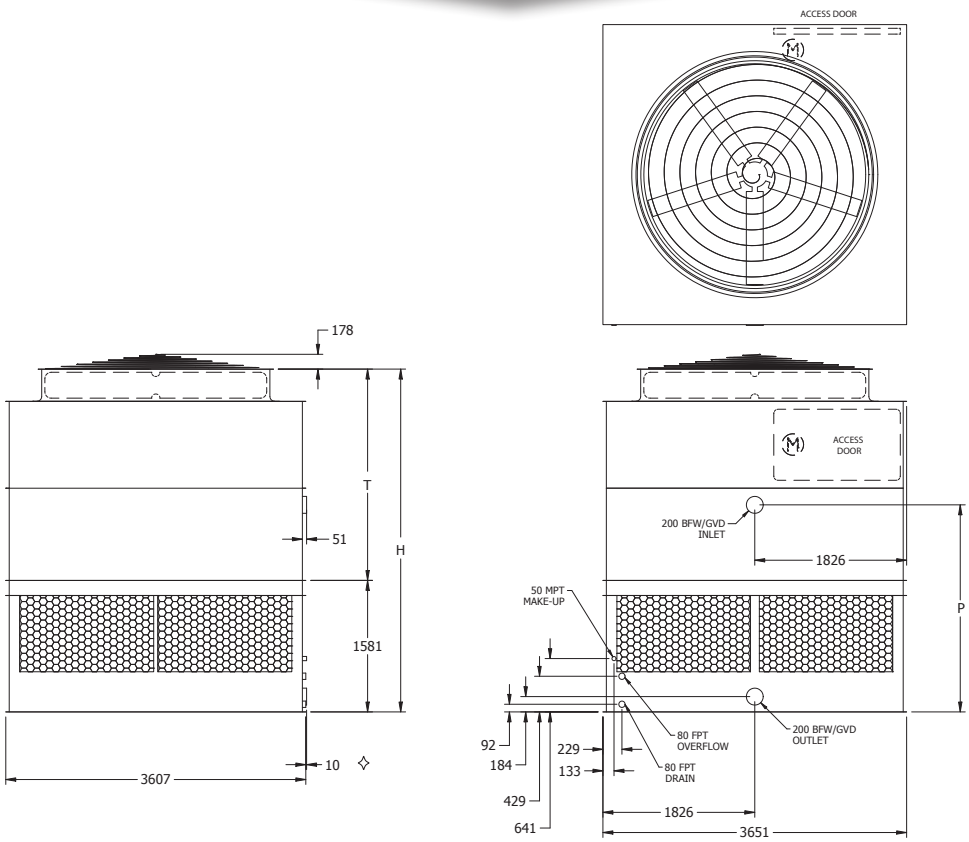

Model No.	Weights (kg)			Fan Motor (kW)	Air Flow (m^3/s)	Dimensions (mm)		
	Shipping	Operating	Heaviest Section✦			H†	T†	P
AT 112-2I12	3,325	6,140	2,235	7.5	33.8	4,121	2,540	2,489
AT 112-2J12	3,355	6,175	2,270	11	38.4	4,121	2,540	2,489
AT 112-2K12	3,380	6,195	2,290	15	42.1	4,121	2,540	2,489
AT 112-2L12	3,400	6,220	2,315	18.5	45.2	4,121	2,540	2,489
AT 112-2M12	3,445	6,265	2,360	22	47.9	4,121	2,540	2,489
AT 112-3I12	3,570	6,385	2,480	7.5	33.3	4,426	2,845	2,794
AT 112-3J12	3,600	6,420	2,515	11	37.8	4,426	2,845	2,794
AT 112-3K12	3,625	6,440	2,535	15	41.3	4,426	2,845	2,794
AT 112-3L12	3,645	6,465	2,560	18.5	44.3	4,426	2,845	2,794
AT 112-3M12	3,690	6,510	2,605	22	47.0	4,426	2,845	2,794
AT 112-4I12	3,790	6,610	2,705	7.5	32.7	4,731	3,150	3,099
AT 112-4J12	3,825	6,640	2,735	11	37.2	4,731	3,150	3,099
AT 112-4K12	3,845	6,665	2,760	15	40.7	4,731	3,150	3,099
AT 112-4L12	3,870	6,685	2,780	18.5	43.6	4,731	3,150	3,099
AT 112-4M12	3,915	6,730	2,825	22	46.2	4,731	3,150	3,099
AT 112-4N12	4,030	6,845	2,940	30	50.5	4,731	3,150	3,099
AT 112-4I12T	3,850	6,670	2,705	7.5	33.32	5,036	3,150	3,404
AT 112-4J12T	3,885	6,700	2,735	11	37.90	5,036	3,150	3,404
AT 112-4K12T	3,905	6,720	2,760	15	41.48	5,036	3,150	3,404
AT 112-4L12T	3,930	6,745	2,780	18.5	44.46	5,036	3,150	3,404
AT 112-4M12T	3,975	6,790	2,825	22	47.05	5,036	3,150	3,404
AT 112-4N12T	4,085	6,905	2,940	30	51.49	5,036	3,150	3,404
AT 112-5I12T	4,090	6,910	2,945	7.5	32.80	5,340	3,454	3,708
AT 112-5J12T	4,125	6,940	2,975	11	37.28	5,340	3,454	3,708
AT 112-5K12T	4,145	6,965	3,000	15	40.78	5,340	3,454	3,708
AT 112-5L12T	4,170	6,985	3,020	18.5	43.70	5,340	3,454	3,708
AT 112-5M12T	4,215	7,030	3,065	22	46.25	5,340	3,454	3,708
AT 112-5N12T	4,325	7,145	3,180	30	50.64	5,340	3,454	3,708
SLSF Addition*	318	318	318			546	546	

NOTE: (1) An adequately sized bleed line must be installed in the cooling tower system to prevent build-up of impurities in the recirculated water.
(2) Do not use catalog drawings for certified prints. Dimensions and weights are subject to change.
(3) Adequate spacing must be allowed for access to the cooling tower. Refer to EVAPCO's Equipment Layout Manual.

✧ Outlet connection extends beyond bottom flange.
† Height includes fan guard which ships factory mounted.
✦ Heaviest section is upper section.
* Additional weight and dimensions for optional SLSF.

Models: AT 112-2I14 to 112-5N14T

One-Cell Cooling Towers

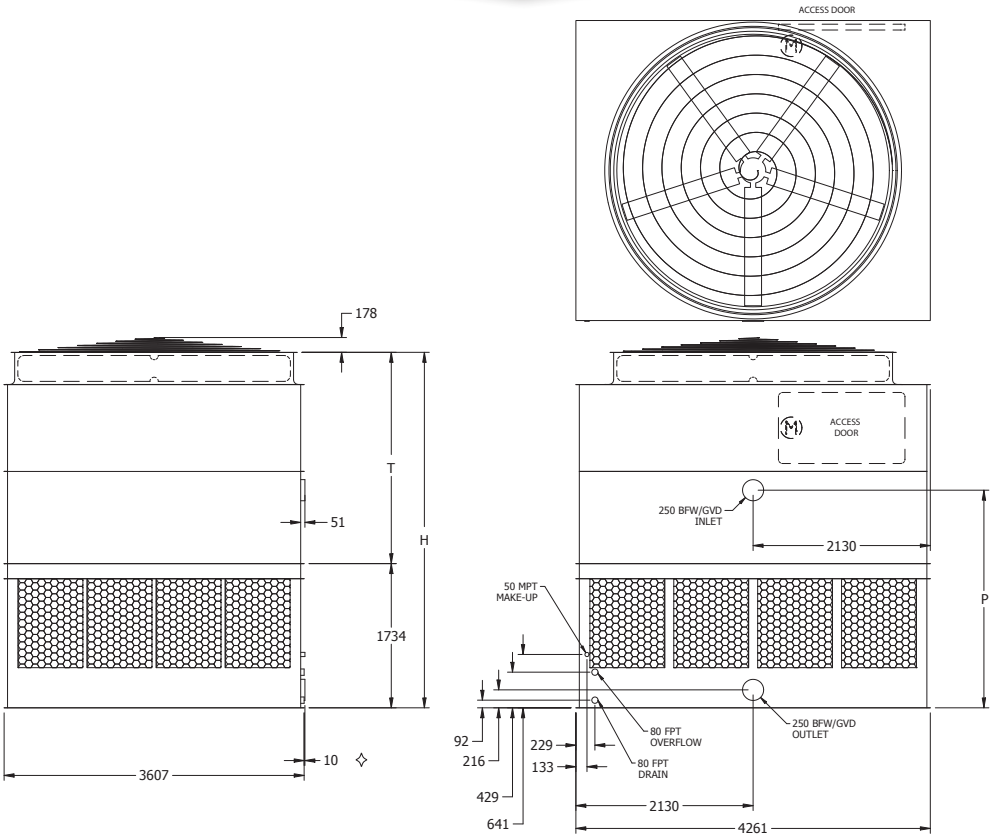

Model No.	Weights (kg)			Fan Motor (kW)	Air Flow (m^3/s)	Dimensions (mm)		
	Shipping	Operating	Heaviest Section✦			H†	T†	P
AT 112-2I14	3,735	7,060	2,430	7.5	36.7	4,274	2,540	2,616
AT 112-2J14	3,765	7,090	2,465	11	41.8	4,274	2,540	2,616
AT 112-2K14	3,790	7,115	2,490	15	45.8	4,274	2,540	2,616
AT 112-2L14	3,820	7,145	2,515	18.5	49.1	4,274	2,540	2,616
AT 112-2M14	3,850	7,175	2,550	22	52.1	4,274	2,540	2,616
AT 112-3I14	4,030	7,355	2,730	7.5	36.2	4,578	2,845	2,921
AT 112-3J14	4,065	7,390	2,760	11	41.1	4,578	2,845	2,921
AT 112-3K14	4,090	7,415	2,790	15	45.0	4,578	2,845	2,921
AT 112-3L14	4,120	7,445	2,815	18.5	48.3	4,578	2,845	2,921
AT 112-3M14	4,150	7,475	2,850	22	51.1	4,578	2,845	2,921
AT 112-3N14	4,270	7,595	2,965	30	56.0	4,578	2,845	2,921
AT 112-4I14	4,270	7,595	2,965	7.5	35.5	4,883	3,150	3,226
AT 112-4J14	4,300	7,625	3,000	11	40.4	4,883	3,150	3,226
AT 112-4K14	4,325	7,650	3,025	15	44.3	4,883	3,150	3,226
AT 112-4L14	4,355	7,680	3,055	18.5	47.5	4,883	3,150	3,226
AT 112-4M14	4,385	7,710	3,085	22	50.3	4,883	3,150	3,226
AT 112-4N14	4,505	7,830	3,200	30	55.0	4,883	3,150	3,226
AT 112-4I14T	4,330	7,655	2,965	7.5	36.25	5,188	3,150	3,531
AT 112-4J14T	4,360	7,685	3,000	11	41.20	5,188	3,150	3,531
AT 112-4K14T	4,390	7,715	3,025	15	45.12	5,188	3,150	3,531
AT 112-4L14T	4,415	7,740	3,055	18.5	48.42	5,188	3,150	3,531
AT 112-4M14T	4,445	7,770	3,085	22	51.25	5,188	3,150	3,531
AT 112-4N14T	4,565	7,890	3,200	30	56.02	5,188	3,150	3,531
AT 112-5I14T	4,605	7,930	3,240	7.5	35.68	5,493	3,454	3,835
AT 112-5J14T	4,635	7,960	3,275	11	40.54	5,493	3,454	3,835
AT 112-5K14T	4,665	7,990	3,300	15	44.41	5,493	3,454	3,835
AT 112-5L14T	4,690	8,015	3,325	18.5	47.62	5,493	3,454	3,835
AT 112-5M14T	4,720	8,045	3,360	22	50.40	5,493	3,454	3,835
AT 112-5N14T	4,840	8,165	3,475	30	55.12	5,493	3,454	3,835
SLSF Addition*	318	318	318			393	546	

NOTE: (1) An adequately sized bleed line must be installed in the cooling tower system to prevent build-up of impurities in the recirculated water.
(2) Do not use catalog drawings for certified prints. Dimensions and weights are subject to change.
(3) Adequate spacing must be allowed for access to the cooling tower. Refer to EVAPCO's Equipment Layout Manual.

✧ Outlet connection extends beyond bottom flange.
† Height includes fan guard which ships factory mounted.
✦ Heaviest section is upper section.
* Additional weight and dimensions for optional SLSF.

Models: AT 112-2J18F to 112-5P18FT

One-Cell Cooling Towers

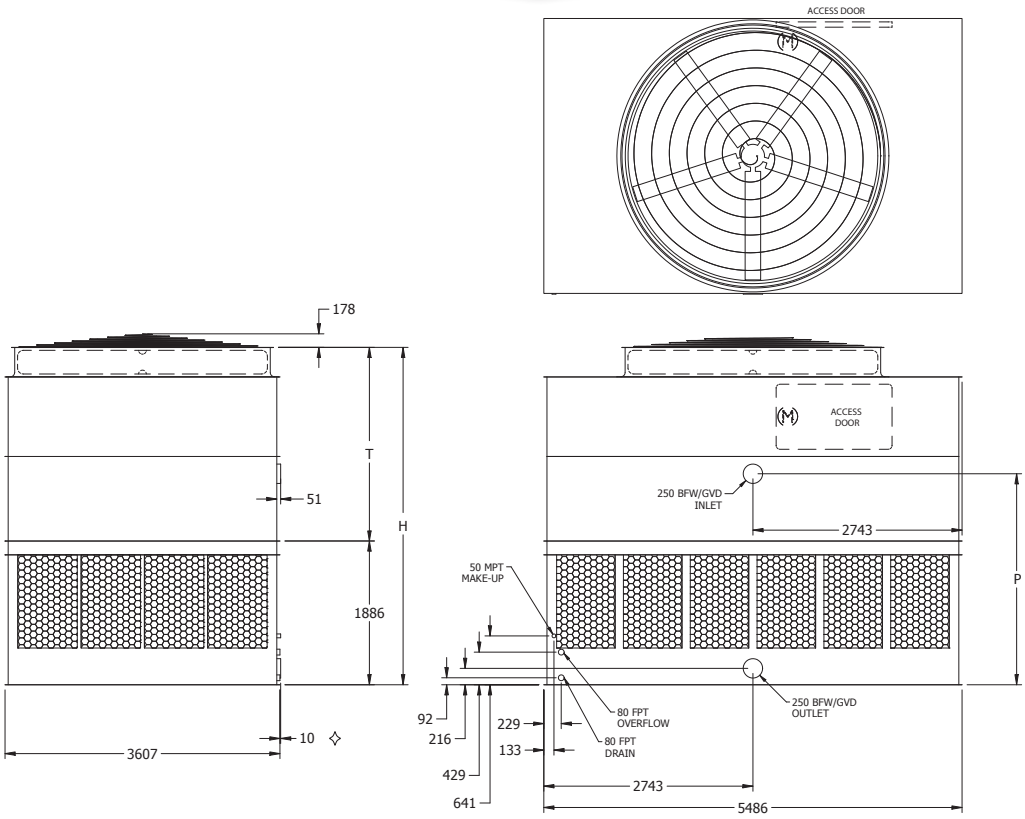

Model No.	Weights (kg)			Fan Motor (kW)	Air Flow (m^3/s)	Dimensions (mm)		
	Shipping	Operating	Heaviest Section✦			H†	T†	P
AT 112-2J18F	4,810	9,015	3,040	11	52.0	4,426	2,540	2,769
AT 112-2K18F	4,835	9,040	3,065	15	56.9	4,426	2,540	2,769
AT 112-2L18F	4,860	9,065	3,090	18.5	61.2	4,426	2,540	2,769
AT 112-2M18F	4,910	9,115	3,140	22	64.8	4,426	2,540	2,769
AT 112-2N18F	5,025	9,230	3,255	30	71.0	4,426	2,540	2,769
AT 112-3J18F	5,160	9,365	3,395	11	51.2	4,731	2,845	3,073
AT 112-3K18F	5,190	9,395	3,420	15	56.0	4,731	2,845	3,073
AT 112-3L18F	5,210	9,415	3,445	18.5	60.1	4,731	2,845	3,073
AT 112-3M18F	5,260	9,465	3,495	22	63.7	4,731	2,845	3,073
AT 112-3N18F	5,380	9,585	3,610	30	69.7	4,731	2,845	3,073
AT 112-3O18F	5,405	9,610	3,640	37	74.8	4,731	2,845	3,073
AT 112-4J18F	5,500	9,700	3,730	11	50.4	5,036	3,150	3,378
AT 112-4K18F	5,525	9,730	3,755	15	55.1	5,036	3,150	3,378
AT 112-4L18F	5,545	9,750	3,780	18.5	59.2	5,036	3,150	3,378
AT 112-4M18F	5,595	9,800	3,830	22	62.7	5,036	3,150	3,378
AT 112-4N18F	5,715	9,920	3,945	30	68.5	5,036	3,150	3,378
AT 112-4O18F	5,740	9,945	3,975	37	73.4	5,036	3,150	3,378
AT 112-4P18F	5,790	9,995	4,025	45	77.8	5,036	3,150	3,378
AT 112-4J18FT	5,570	9,775	3,730	11	51.40	5,340	3,150	3,683
AT 112-4K18FT	5,600	9,805	3,755	15	56.26	5,340	3,150	3,683
AT 112-4L18FT	5,620	9,825	3,780	18.5	60.41	5,340	3,150	3,683
AT 112-4M18FT	5,670	9,875	3,830	22	64.00	5,340	3,150	3,683
AT 112-4N18FT	5,790	9,995	3,945	30	69.99	5,340	3,150	3,683
AT 112-4O18FT	5,815	10,020	3,975	37	75.04	5,340	3,150	3,683
AT 112-4P18FT	5,865	10,070	4,025	45	79.48	5,340	3,150	3,683
AT 112-5J18FT	5,915	10,115	4,070	11	50.59	5,645	3,454	3,988
AT 112-5K18FT	5,940	10,145	4,095	15	55.41	5,645	3,454	3,988
AT 112-5L18FT	5,960	10,165	4,120	18.5	59.47	5,645	3,454	3,988
AT 112-5M18FT	6,010	10,215	4,170	22	62.96	5,645	3,454	3,988
AT 112-5N18FT	6,130	10,335	4,285	30	68.86	5,645	3,454	3,988
AT 112-5O18FT	6,160	10,360	4,315	37	73.81	5,645	3,454	3,988
AT 112-5P18FT	6,205	10,410	4,365	45	78.20	5,645	3,454	3,988
SLSF Addition*	544	544	544			394	394	

NOTE: (1) An adequately sized bleed line must be installed in the cooling tower system to prevent build-up of impurities in the recirculated water.
(2) Do not use catalog drawings for certified prints. Dimensions and weights are subject to change.
(3) Adequate spacing must be allowed for access to the cooling tower. Refer to EVAPCO's Equipment Layout Manual.
(4) Optional Dual Fan units will have a "-DF" at the end of the model number in Spectrum. Fan kW and weights may vary.

✧ Outlet connection extends beyond bottom flange.
† Height includes fan guard which ships factory mounted.
✦ Heaviest section is upper section.
* Additional weight and dimensions for optional SLSF.

Models: AT 112-2K20F to 112-5P20FT

One-Cell Cooling Towers

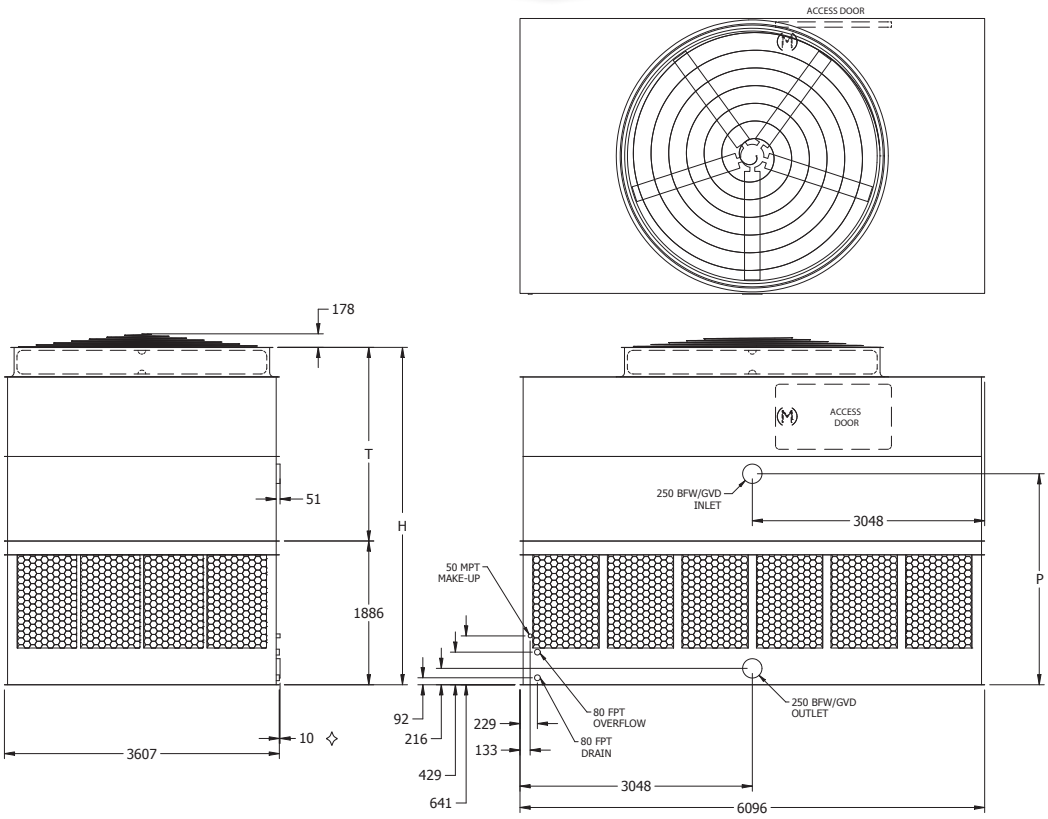

Model No.	Weights (kg)			Fan Motor (kW)	Air Flow (m^3/s)	Dimensions (mm)		
	Shipping	Operating	Heaviest Section✦			H†	T†	P
AT 112-2K20F	5,135	9,850	3,270	15	58.5	4,426	2,540	2,769
AT 112-2L20F	5,155	9,875	3,295	18.5	62.8	4,426	2,540	2,769
AT 112-2M20F	5,205	9,925	3,345	22	66.5	4,426	2,540	2,769
AT 112-2N20F	5,325	10,045	3,460	30	72.7	4,426	2,540	2,769
AT 112-2O20F	5,350	10,070	3,490	37	78.0	4,426	2,540	2,769
AT 112-3K20F	5,465	10,185	3,600	15	57.5	4,731	2,845	3,073
AT 112-3L20F	5,490	10,205	3,625	18.5	61.7	4,731	2,845	3,073
AT 112-3M20F	5,540	10,255	3,675	22	65.3	4,731	2,845	3,073
AT 112-3N20F	5,655	10,375	3,790	30	71.4	4,731	2,845	3,073
AT 112-3O20F	5,685	10,400	3,820	37	76.5	4,731	2,845	3,073
AT 112-4K20F	5,875	10,590	4,010	15	56.5	5,036	3,150	3,378
AT 112-4L20F	5,895	10,615	4,030	18.5	60.6	5,036	3,150	3,378
AT 112-4M20F	5,945	10,665	4,080	22	64.2	5,036	3,150	3,378
AT 112-4N20F	6,065	10,780	4,200	30	70.2	5,036	3,150	3,378
AT 112-4O20F	6,090	10,810	4,225	37	75.3	5,036	3,150	3,378
AT 112-4P20F	6,140	10,860	4,275	45	79.8	5,036	3,150	3,378
AT 112-4K20FT	5,950	10,670	4,010	15	57.72	5,340	3,150	3,683
AT 112-4L20FT	5,975	10,690	4,030	18.5	61.92	5,340	3,150	3,683
AT 112-4M20FT	6,025	10,740	4,080	22	65.60	5,340	3,150	3,683
AT 112-4N20FT	6,140	10,860	4,200	30	71.74	5,340	3,150	3,683
AT 112-4O20FT	6,170	10,885	4,225	37	76.88	5,340	3,150	3,683
AT 112-4P20FT	6,220	10,935	4,275	45	81.46	5,340	3,150	3,683
AT 112-5K20FT	6,325	11,045	4,385	15	56.82	5,645	3,454	3,988
AT 112-5L20FT	6,350	11,065	4,405	18.5	60.93	5,645	3,454	3,988
AT 112-5M20FT	6,400	11,115	4,455	22	64.56	5,645	3,454	3,988
AT 112-5N20FT	6,515	11,235	4,575	30	70.60	5,645	3,454	3,988
AT 112-5O20FT	6,545	11,260	4,600	37	75.61	5,645	3,454	3,988
AT 112-5P20FT	6,595	11,310	4,650	45	80.14	5,645	3,454	3,988
SLSF Addition*	544	544	544			394	394	

NOTE: (1) An adequately sized bleed line must be installed in the cooling tower system to prevent build-up of impurities in the recirculated water.
(2) Do not use catalog drawings for certified prints. Dimensions and weights are subject to change.
(3) Adequate spacing must be allowed for access to the cooling tower. Refer to EVAPCO's Equipment Layout Manual.
(4) Optional Dual Fan units will have a "-DF" at the end of the model number in Spectrum. Fan kW and weights may vary.

✧ Outlet connection extends beyond bottom flange.
† Height includes fan guard which ships factory mounted.
✦ Heaviest section is upper section.
* Additional weight and dimensions for optional SLSF.

Models: AT 114-2K18 to 114-4Q18

One-Cell Cooling Towers

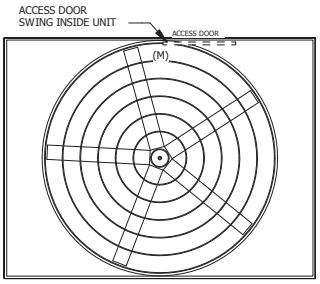

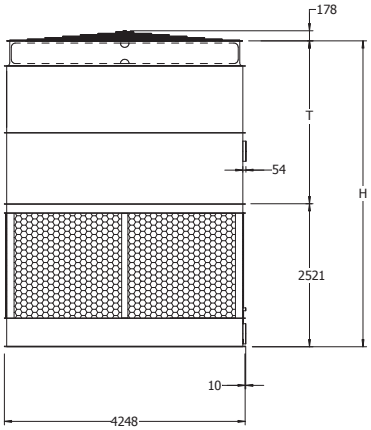

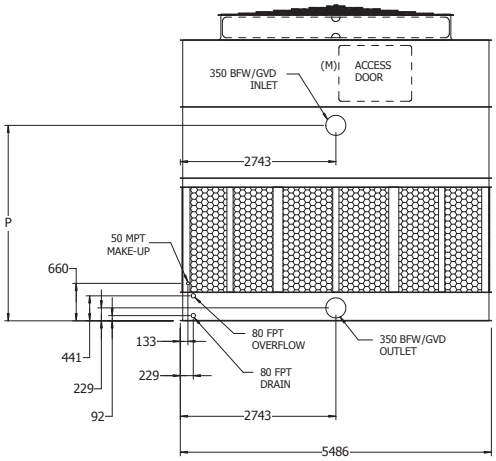

Model No.	Weights (kg)			Fan Motor (kW)	Air Flow (m^3/s)	Dimensions (mm)		
	Shipping	Operating	Heaviest Section✦			H†	T†	P
AT 114-2K18	7,075	11,480	4,705	15	62.4	5,394	2,870	3,448
AT 114-2L18	7,100	11,505	4,725	18.5	67.0	5,394	2,870	3,448
AT 114-2M18	7,110	11,510	4,735	22	71.1	5,394	2,870	3,448
AT 114-2N18	7,175	11,580	4,805	30	77.9	5,394	2,870	3,448
AT 114-2O18	7,335	11,740	4,960	37	83.7	5,394	2,870	3,448
AT 114-3K18	7,510	11,915	5,140	15	61.4	5,699	3,175	3,753
AT 114-3L18	7,535	11,940	5,160	18.5	65.9	5,699	3,175	3,753
AT 114-3M18	7,545	11,950	5,170	22	69.8	5,699	3,175	3,753
AT 114-3N18	7,610	12,015	5,240	30	76.5	5,699	3,175	3,753
AT 114-3O18	7,770	12,175	5,400	37	82.1	5,699	3,175	3,753
AT 114-3P18	7,845	12,250	5,475	45	87.0	5,699	3,175	3,753
AT 114-4K18	7,885	12,290	5,510	15	60.3	6,004	3,480	4,058
AT 114-4L18	7,905	12,310	5,535	18.5	64.8	6,004	3,480	4,058
AT 114-4M18	7,915	12,320	5,545	22	68.6	6,004	3,480	4,058
AT 114-4N18	7,985	12,390	5,610	30	75.2	6,004	3,480	4,058
AT 114-4O18	8,140	12,545	5,770	37	80.7	6,004	3,480	4,058
AT 114-4P18	8,220	12,625	5,845	45	85.5	6,004	3,480	4,058
AT 114-4Q18	8,330	12,730	5,955	55	91.7	6,004	3,480	4,058
SLSF Addition*	567	567	567			343	343	

NOTE: (1) An adequately sized bleed line must be installed in the cooling tower system to prevent build-up of impurities in the recirculated water.
(2) Do not use catalog drawings for certified prints. Dimensions and weights are subject to change.
(3) Adequate spacing must be allowed for access to the cooling tower. Refer to EVAPCO's Equipment Layout Manual.

✧ Outlet connection extends beyond bottom flange.
† Height includes fan guard which ships factory mounted.
✦ Heaviest section is upper section.
* Additional weight and dimensions for optional SLSF.

Models: AT 114-2K24 to 114-4R24*

One-Cell Cooling Towers

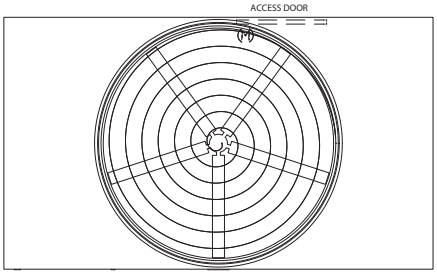

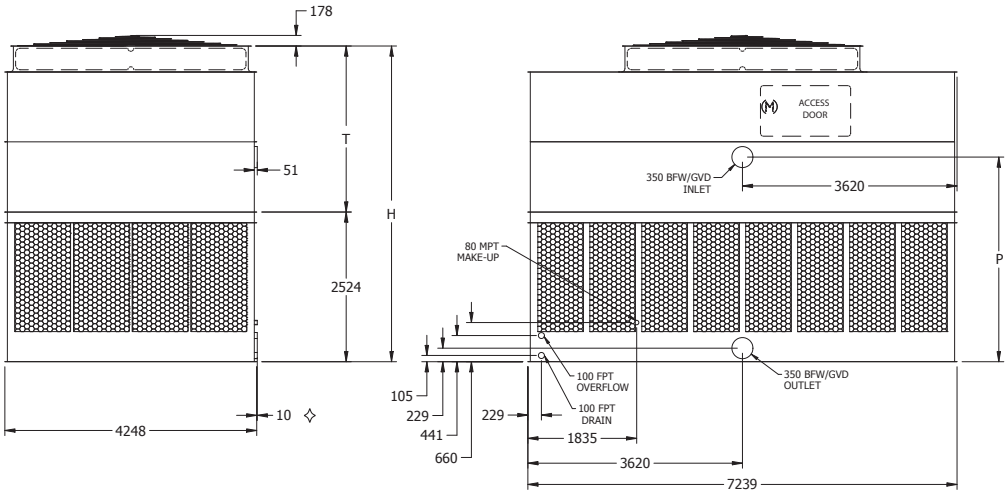

Model No.	Weights (kg)			Fan Motor (kW)	Air Flow (m^3/s)	Dimensions (mm)		
	Shipping	Operating	Heaviest Section✦			H†	T†	P
AT 114-2K24	7,650	14,840	4,810	15	75.3	5,324	2,800	3,451
AT 114-2L24	7,675	14,865	4,830	18.5	80.8	5,324	2,800	3,451
AT 114-2M24	7,685	14,875	4,840	22	85.7	5,324	2,800	3,451
AT 114-2N24	7,750	14,940	4,910	30	94.0	5,324	2,800	3,451
AT 114-2O24	7,910	15,100	5,065	37	100.9	5,324	2,800	3,451
AT 114-3K24	8,125	15,315	5,280	15	74.1	5,629	3,105	3,756
AT 114-3L24	8,145	15,335	5,300	18.5	79.5	5,629	3,105	3,756
AT 114-3M24	8,155	15,345	5,310	22	84.3	5,629	3,105	3,756
AT 114-3N24	8,225	15,415	5,380	30	92.3	5,629	3,105	3,756
AT 114-3O24	8,380	15,570	5,540	37	99.0	5,629	3,105	3,756
AT 114-3P24	8,460	15,650	5,615	45	104.8	5,629	3,105	3,756
AT 114-4K24	8,595	15,785	5,750	15	72.8	5,934	3,410	4,061
AT 114-4L24	8,620	15,810	5,775	18.5	78.2	5,934	3,410	4,061
AT 114-4M24	8,625	15,815	5,785	22	82.8	5,934	3,410	4,061
AT 114-4N24	8,695	15,885	5,850	30	90.8	5,934	3,410	4,061
AT 114-4O24	8,855	16,045	6,010	37	97.5	5,934	3,410	4,061
AT 114-4P24	8,930	16,120	6,085	45	103.2	5,934	3,410	4,061
AT 114-4Q24	9,040	16,230	6,195	55	110.6	5,934	3,410	4,061
AT 114-4R24*	9,240	16,430	6,395	75	121.1	5,934	3,410	4,061
SLSF Addition**	567	567	567			343	343	

* Model available with gear drive only. Motors and access doors located on 4,248 mm unit ends. Super Low Sound Fan is not available on this unit.

NOTE: (1) An adequately sized bleed line must be installed in the cooling tower system to prevent build-up of impurities in the recirculated water.
(2) Do not use catalog drawings for certified prints. Dimensions and weights are subject to change.
(3) Adequate spacing must be allowed for access to the cooling tower. Refer to EVAPCO's Equipment Layout Manual.

✧ Outlet connection extends beyond bottom flange.
† Height includes fan guard which ships factory mounted.
✦ Heaviest section is upper section.
** Additional weight and dimensions for optional SLSF.

Models: AT 114-5K26 to 114-5O26

One-Cell Cooling Towers

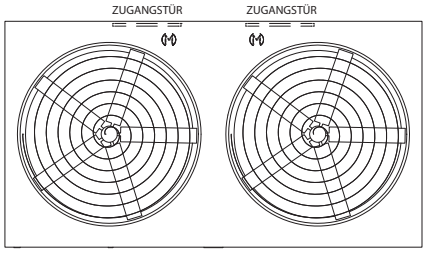

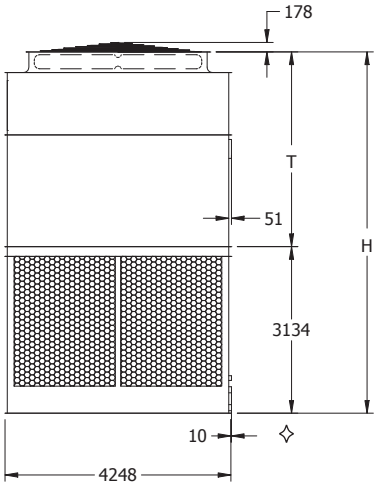

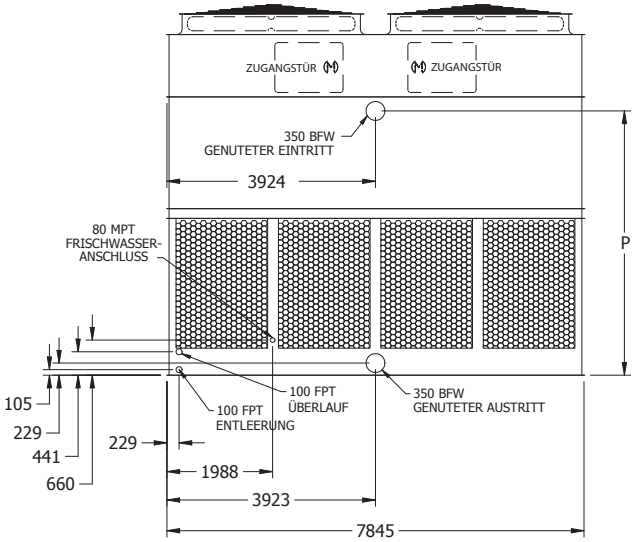

Model No.	Weights (kg)			Fan Motor (kW)	Air Flow (m^3/s)	Dimensions (mm)		
	Shipping	Operating	Heaviest Section✦			H†	T†	P
AT 114-5K26	11,175	18,810	8,010	(2) 15	94.5	6,795	3,661	4,972
AT 114-5L26	11,205	18,840	8,040	(2) 18.5	101.3	6,795	3,661	4,972
AT 114-5M26	11,250	18,885	8,085	(2) 22	107.3	6,795	3,661	4,972
AT 114-5N26	11,395	19,030	8,230	(2) 30	117.3	6,795	3,661	4,972
AT 114-5O26	11,405	19,035	8,235	(2) 37	125.7	6,795	3,661	4,972
SLSF Addition*	✤	1,089	✤			394	394	

NOTE: (1) An adequately sized bleed line must be installed in the cooling tower system to prevent build-up of impurities in the recirculated water.
(2) Do not use catalog drawings for certified prints. Dimensions and weights are subject to change.
(3) Adequate spacing must be allowed for access to the cooling tower. Refer to EVAPCO's Equipment Layout Manual.

✧ Outlet connection extends beyond bottom flange.
† Height includes fan guard which ships factory mounted.
* Additional weight and dimensions for optional SLSF.
✦ Heaviest section is upper section.
✤ Please consult the factory for additional information regarding shipping and section weight changes.

Models: AT 26-2F17 to 26-5J17T

Two-Cell Cooling Towers

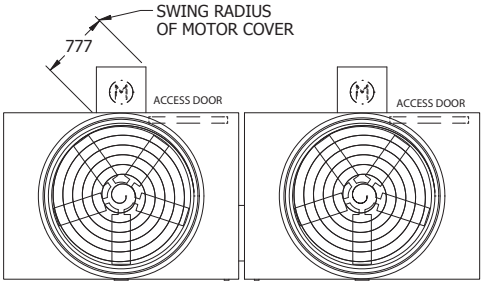

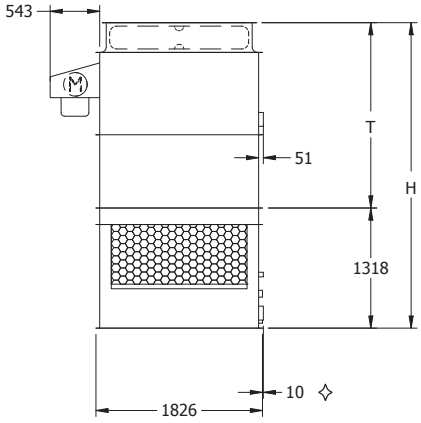

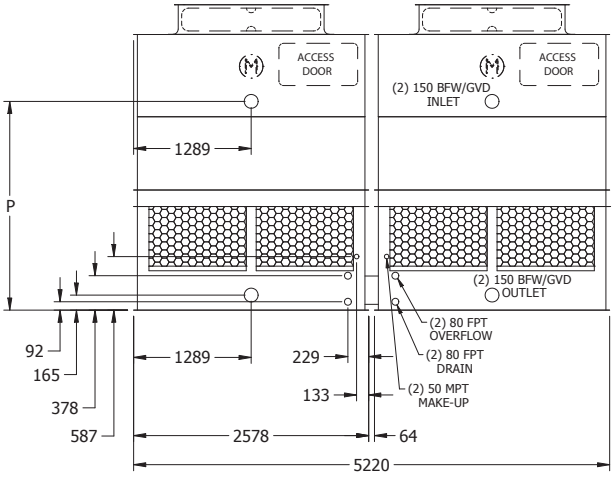

Model No.	Weights (kg)			Fan Motor (kW)	Air Flow (m^3/s)	Dimensions (mm)		
	Shipping	Operating	Heaviest Section✦			H†	T†	P
AT 26-2F17	2,850	4,700	905	(2) 2.2	21.3	3,350	2,032	2,289
AT 26-2G17	2,865	4,715	910	(2) 4	25.1	3,350	2,032	2,289
AT 26-2H17	2,905	4,755	930	(2) 5.5	28.6	3,350	2,032	2,289
AT 26-3F17	3,030	4,880	995	(2) 2.2	21.0	3,654	2,337	2,594
AT 26-3G17	3,050	4,900	1,000	(2) 4	24.7	3,654	2,337	2,594
AT 26-3H17	3,085	4,935	1,020	(2) 5.5	28.0	3,654	2,337	2,594
AT 26-3I17	3,110	4,960	1,035	(2) 7.5	30.7	3,654	2,337	2,594
AT 26-4F17	3,230	5,080	1,095	(2) 2.2	20.7	3,959	2,642	2,899
AT 26-4G17	3,250	5,100	1,100	(2) 4	24.3	3,959	2,642	2,899
AT 26-4H17	3,285	5,135	1,120	(2) 5.5	27.6	3,959	2,642	2,899
AT 26-4I17	3,310	5,160	1,135	(2) 7.5	30.2	3,959	2,642	2,899
AT 26-4J17	3,375	5,225	1,165	(2) 11	34.4	3,959	2,642	2,899
AT 26-4F17T	3,305	5,155	1,095	(2) 2.2	21.05	4,264	2,642	3,204
AT 26-4G17T	3,325	5,175	1,100	(2) 4	24.73	4,264	2,642	3,204
AT 26-4H17T	3,360	5,210	1,120	(2) 5.5	28.18	4,264	2,642	3,204
AT 26-4I17T	3,390	5,240	1,135	(2) 7.5	30.82	4,264	2,642	3,204
AT 26-4J17T	3,450	5,300	1,165	(2) 11	35.02	4,264	2,642	3,204
AT 26-5F17T	3,520	5,370	1,200	(2) 2.2	20.72	4,569	2,946	3,508
AT 26-5G17T	3,540	5,390	1,210	(2) 4	24.35	4,569	2,946	3,508
AT 26-5H17T	3,575	5,425	1,225	(2) 5.5	27.70	4,569	2,946	3,508
AT 26-5I17T	3,600	5,450	1,240	(2) 7.5	30.30	4,569	2,946	3,508
AT 26-5J17T	3,665	5,515	1,270	(2) 11	34.45	4,569	2,946	3,508
SLSF Addition*	136	136	68			330	330	

NOTE: (1) An adequately sized bleed line must be installed in the cooling tower system to prevent build-up of impurities in the recirculated water.
(2) Do not use catalog drawings for certified prints. Dimensions and weights are subject to change.
(3) Adequate spacing must be allowed for access to the cooling tower. Refer to EVAPCO's Equipment Layout Manual.

✧ Outlet connection extends beyond bottom flange.
† Height includes fan guard which ships factory mounted.
✦ Heaviest section is upper section.
* Additional weight and dimensions for optional SLSF.

Models: AT 28-2F17 to 28-5J17T

Two-Cell Cooling Towers

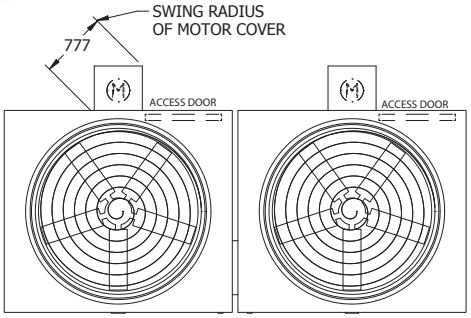

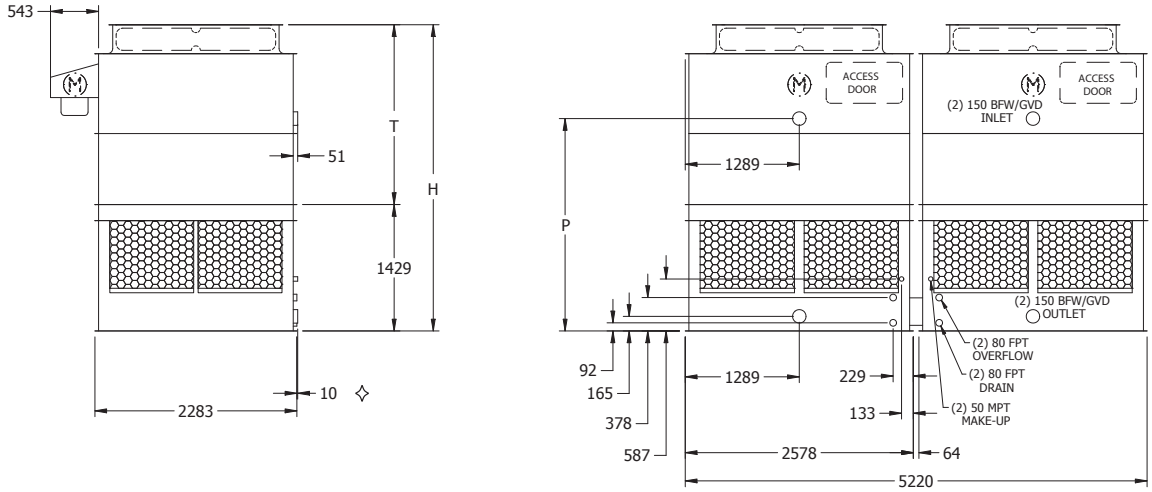

Model No.	Weights (kg)			Fan Motor (kW)	Air Flow (m^3/s)	Dimensions (mm)		
	Shipping	Operating	Heaviest Section✦			H†	T†	P
AT 28-2F17	3,240	5,435	1,025	(2) 2.2	25.1	3,461	2,032	2,400
AT 28-2G17	3,255	5,450	1,035	(2) 4	29.5	3,461	2,032	2,400
AT 28-2H17	3,295	5,490	1,050	(2) 5.5	33.7	3,461	2,032	2,400
AT 28-2I17	3,320	5,515	1,065	(2) 7.5	37.0	3,461	2,032	2,400
AT 28-3F17	3,445	5,645	1,130	(2) 2.2	24.8	3,766	2,337	2,705
AT 28-3G17	3,465	5,660	1,140	(2) 4	29.1	3,766	2,337	2,705
AT 28-3H17	3,500	5,695	1,155	(2) 5.5	33.1	3,766	2,337	2,705
AT 28-3I17	3,530	5,725	1,170	(2) 7.5	36.3	3,766	2,337	2,705
AT 28-3J17	3,585	5,780	1,195	(2) 11	41.3	3,766	2,337	2,705
AT 28-4F17	3,690	5,890	1,250	(2) 2.2	24.4	4,070	2,642	3,010
AT 28-4G17	3,710	5,905	1,260	(2) 4	28.6	4,070	2,642	3,010
AT 28-4H17	3,745	5,940	1,280	(2) 5.5	32.6	4,070	2,642	3,010
AT 28-4I17	3,775	5,970	1,295	(2) 7.5	35.7	4,070	2,642	3,010
AT 28-4J17	3,830	6,025	1,320	(2) 11	40.6	4,070	2,642	3,010
AT 28-4F17T	3,770	5,965	1,250	(2) 2.2	24.82	4,375	2,642	3,315
AT 28-4G17T	3,785	5,985	1,260	(2) 4	29.17	4,375	2,642	3,315
AT 28-4H17T	3,825	6,020	1,280	(2) 5.5	33.23	4,375	2,642	3,315
AT 28-4I17T	3,850	6,045	1,295	(2) 7.5	36.39	4,375	2,642	3,315
AT 28-4J17T	3,905	6,100	1,320	(2) 11	41.39	4,375	2,642	3,315
AT 28-5F17T	4,020	6,215	1,375	(2) 2.2	24.40	4,680	2,946	3,620
AT 28-5G17T	4,035	6,230	1,385	(2) 4	28.69	4,680	2,946	3,620
AT 28-5H17T	4,075	6,270	1,405	(2) 5.5	32.66	4,680	2,946	3,620
AT 28-5I17T	4,100	6,295	1,415	(2) 7.5	35.77	4,680	2,946	3,620
AT 28-5J17T	4,155	6,350	1,445	(2) 11	40.68	4,680	2,946	3,620
SLSF Addition*	136	136	68			432	432	

NOTE: (1) An adequately sized bleed line must be installed in the cooling tower system to prevent build-up of impurities in the recirculated water.
(2) Do not use catalog drawings for certified prints. Dimensions and weights are subject to change.
(3) Adequate spacing must be allowed for access to the cooling tower. Refer to EVAPCO's Equipment Layout Manual.

✧ Outlet connection extends beyond bottom flange.
† Height includes fan guard which ships factory mounted.
✦ Heaviest section is upper section.
* Additional weight and dimensions for optional SLSF.

Models: AT 28-2G18 to 28-5K18T

Two-Cell Cooling Towers

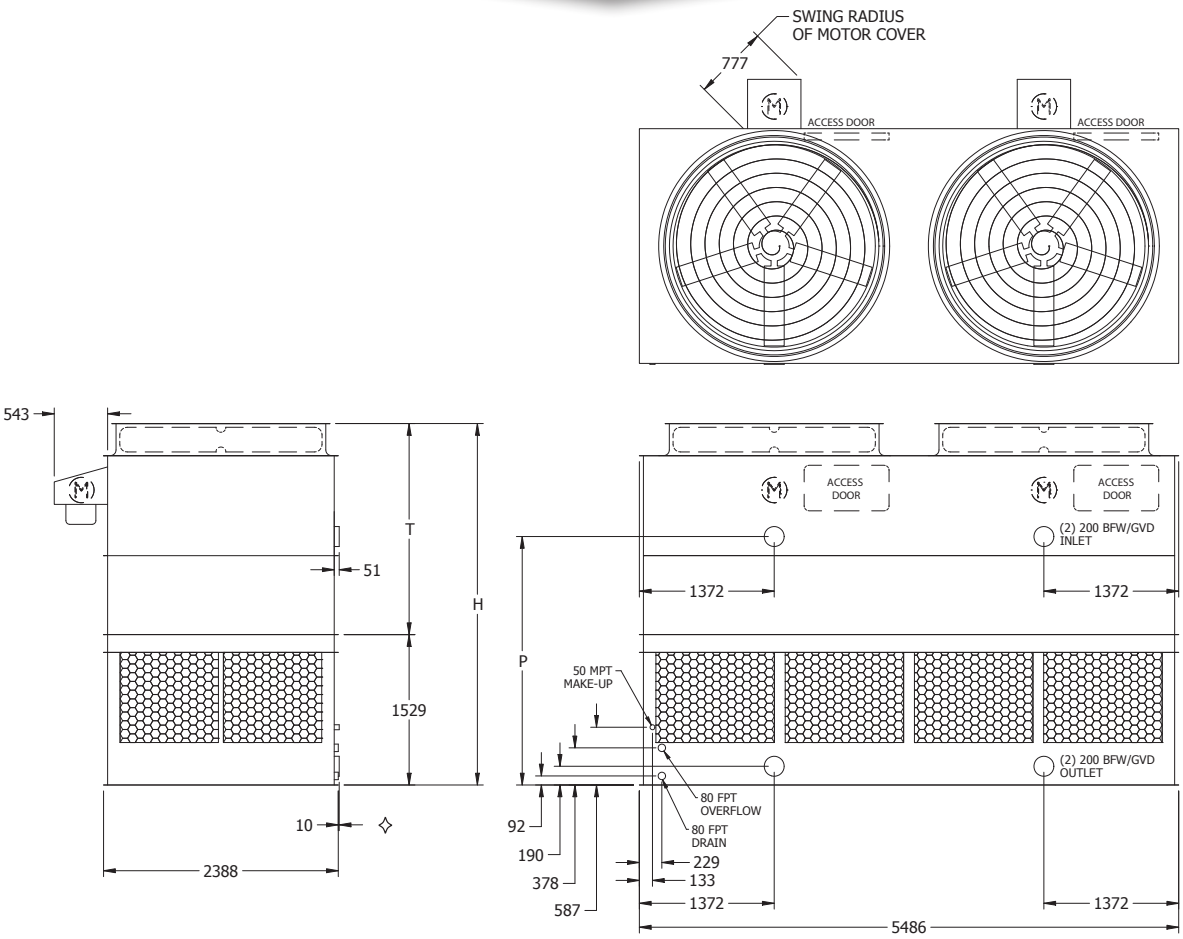

Model No.	Weights (kg)			Fan Motor (kW)	Air Flow (m^3/s)	Dimensions (mm)		
	Shipping	Operating	Heaviest Section✦			H†	T†	P
AT 28-2G18	3,360	5,885	2,125	(2) 4	32.1	3,677	2,146	2,527
AT 28-2H18	3,380	5,900	2,140	(2) 5.5	36.5	3,677	2,146	2,527
AT 28-2I18	3,395	5,915	2,155	(2) 7.5	39.9	3,677	2,146	2,527
AT 28-2J18	3,425	5,945	2,185	(2) 11	45.4	3,677	2,146	2,527
AT 28-3G18	3,585	6,105	2,345	(2) 4	31.6	3,981	2,451	2,832
AT 28-3H18	3,600	6,125	2,365	(2) 5.5	35.8	3,981	2,451	2,832
AT 28-3I18	3,615	6,135	2,375	(2) 7.5	39.2	3,981	2,451	2,832
AT 28-3J18	3,645	6,170	2,410	(2) 11	44.5	3,981	2,451	2,832
AT 28-3K18	3,670	6,190	2,430	(2) 15	48.8	3,981	2,451	2,832
AT 28-4G18	3,825	6,345	2,585	(2) 4	31.0	4,286	2,756	3,137
AT 28-4H18	3,840	6,365	2,605	(2) 5.5	35.2	4,286	2,756	3,137
AT 28-4I18	3,855	6,380	2,615	(2) 7.5	38.6	4,286	2,756	3,137
AT 28-4J18	3,885	6,410	2,650	(2) 11	43.8	4,286	2,756	3,137
AT 28-4K18	3,910	6,430	2,670	(2) 15	47.9	4,286	2,756	3,137
AT 28-4G18T	3,890	6,415	2,585	(2) 4	31.57	4,591	2,756	3,442
AT 28-4H18T	3,910	6,430	2,605	(2) 5.5	35.87	4,591	2,756	3,442
AT 28-4I18T	3,925	6,445	2,615	(2) 7.5	39.31	4,591	2,756	3,442
AT 28-4J18T	3,955	6,475	2,650	(2) 11	44.65	4,591	2,756	3,442
AT 28-4K18T	3,980	6,500	2,670	(2) 15	48.85	4,591	2,756	3,442
AT 28-5G18T	4,165	6,685	2,860	(2) 4	31.05	4,896	3,061	3,747
AT 28-5H18T	4,180	6,705	2,875	(2) 5.5	35.30	4,896	3,061	3,747
AT 28-5I18T	4,195	6,720	2,890	(2) 7.5	38.65	4,896	3,061	3,747
AT 28-5J18T	4,225	6,750	2,920	(2) 11	43.89	4,896	3,061	3,747
AT 28-5K18T	4,250	6,770	2,945	(2) 15	48.04	4,896	3,061	3,747
SLSF Addition*	-	-	-			738	738	

NOTE: (1) An adequately sized bleed line must be installed in the cooling tower system to prevent build-up of impurities in the recirculated water.
(2) Do not use catalog drawings for certified prints. Dimensions and weights are subject to change.
(3) Adequate spacing must be allowed for access to the cooling tower. Refer to EVAPCO's Equipment Layout Manual.
(4) For 4 layers additional height is 738 mm and fan coil is removable for transport.

✧ Outlet connection extends beyond bottom flange.
† Height includes fan guard which ships factory mounted.
✦ Heaviest section is upper section.

Models: AT 28-2H21 to 28-5K21T

Two-Cell Cooling Towers

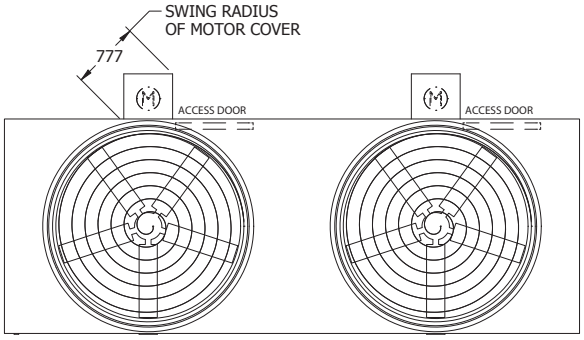

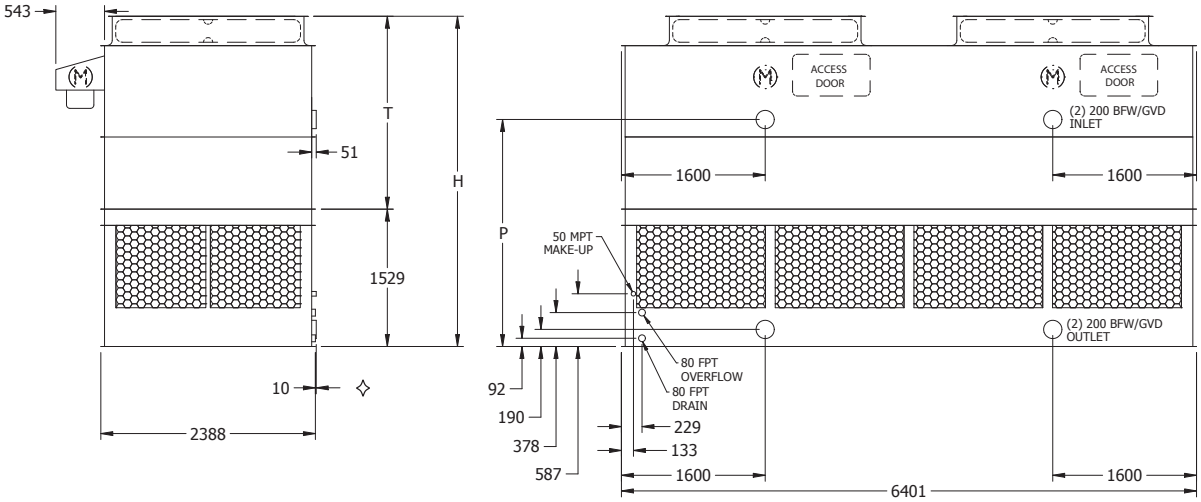

Model No.	Weights (kg)			Fan Motor (kW)	Air Flow (m^3/s)	Dimensions (mm)		
	Shipping	Operating	Heaviest Section✦			H†	T†	P
AT 28-2H21	3,900	6,870	2,495	(2) 5.5	41.1	3,677	2,146	2,527
AT 28-2I21	3,915	6,885	2,510	(2) 7.5	45.0	3,677	2,146	2,527
AT 28-2J21	3,945	6,915	2,540	(2) 11	51.2	3,677	2,146	2,527
AT 28-2K21	3,970	6,940	2,565	(2) 15	56.0	3,677	2,146	2,527
AT 28-3H21	4,155	7,125	2,750	(2) 5.5	40.4	3,981	2,451	2,832
AT 28-3I21	4,170	7,140	2,760	(2) 7.5	44.2	3,981	2,451	2,832
AT 28-3J21	4,200	7,170	2,795	(2) 11	50.2	3,981	2,451	2,832
AT 28-3K21	4,225	7,195	2,815	(2) 15	54.9	3,981	2,451	2,832
AT 28-4H21	4,430	7,405	3,025	(2) 5.5	39.6	4,286	2,756	3,137
AT 28-4I21	4,445	7,415	3,040	(2) 7.5	43.5	4,286	2,756	3,137
AT 28-4J21	4,475	7,450	3,070	(2) 11	49.4	4,286	2,756	3,137
AT 28-4K21	4,500	7,470	3,095	(2) 15	54.0	4,286	2,756	3,137
AT 28-4H21T	4,510	7,480	3,025	(2) 5.5	40.40	4,591	2,756	3,442
AT 28-4I21T	4,520	7,495	3,040	(2) 7.5	44.27	4,591	2,756	3,442
AT 28-4J21T	4,555	7,525	3,070	(2) 11	50.31	4,591	2,756	3,442
AT 28-4K21T	4,575	7,550	3,095	(2) 15	55.03	4,591	2,756	3,442
AT 28-5H21T	4,815	7,790	3,335	(2) 5.5	39.74	4,896	3,061	3,747
AT 28-5I21T	4,830	7,800	3,350	(2) 7.5	43.56	4,896	3,061	3,747
AT 28-5J21T	4,865	7,835	3,380	(2) 11	49.51	4,896	3,061	3,747
AT 28-5K21T	4,885	7,855	3,400	(2) 15	54.13	4,896	3,061	3,747
SLSF Addition*	-	-	-			738	738	

NOTE: (1) An adequately sized bleed line must be installed in the cooling tower system to prevent build-up of impurities in the recirculated water.
(2) Do not use catalog drawings for certified prints. Dimensions and weights are subject to change.
(3) Adequate spacing must be allowed for access to the cooling tower. Refer to EVAPCO's Equipment Layout Manual.
(4) For 4 layers additional height is 738 mm and fan coil is removable for transport.

✧ Outlet connection extends beyond bottom flange.
† Height includes fan guard which ships factory mounted.
✦ Heaviest section is upper section.

Models: AT 28-2H24 to 28-5L24T

Two-Cell Cooling Towers

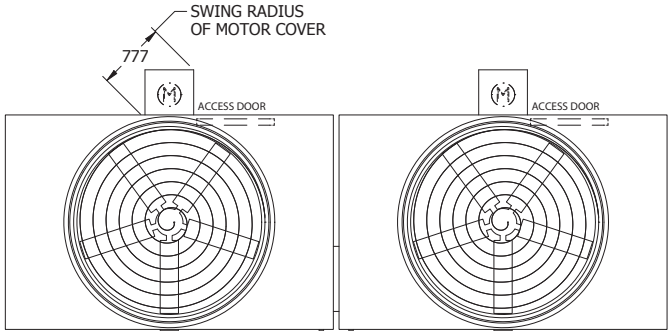

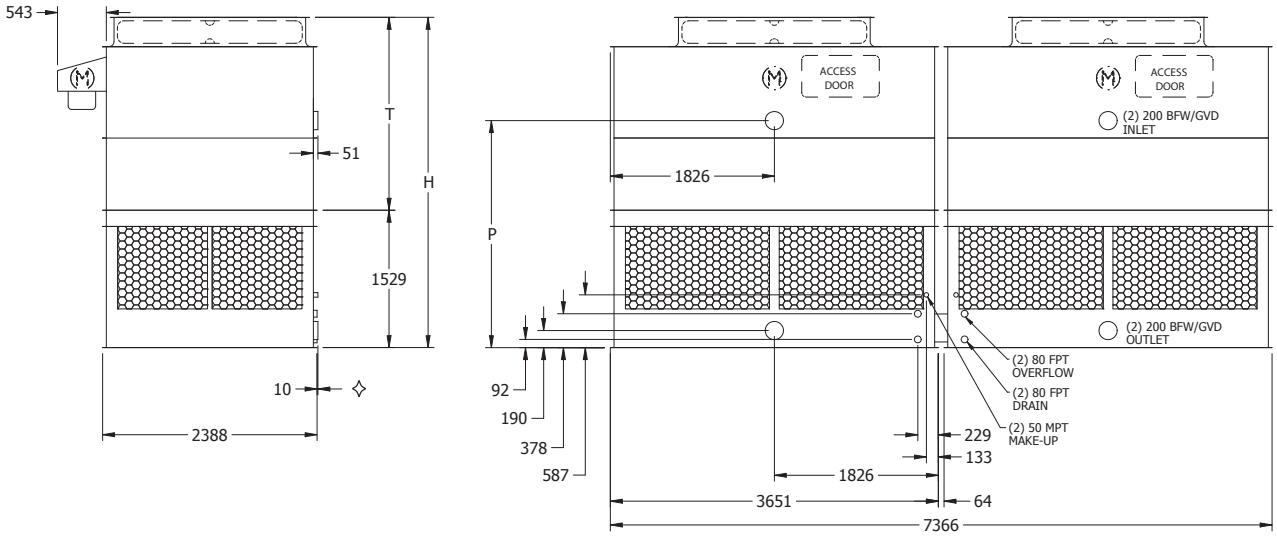

Model No.	Weights (kg)			Fan Motor (kW)	Air Flow (m^3/s)	Dimensions (mm)		
	Shipping	Operating	Heaviest Section✦			H†	T†	P
AT 28-2H24	4,525	7,830	1,440	(2) 5.5	45.2	3,677	2,146	2,527
AT 28-2I24	4,555	7,855	1,455	(2) 7.5	49.5	3,677	2,146	2,527
AT 28-2J24	4,620	7,920	1,490	(2) 11	56.3	3,677	2,146	2,527
AT 28-2K24	4,665	7,965	1,510	(2) 15	61.7	3,677	2,146	2,527
AT 28-3H24	4,825	8,130	1,590	(2) 5.5	44.5	3,981	2,451	2,832
AT 28-3I24	4,855	8,155	1,605	(2) 7.5	48.7	3,981	2,451	2,832
AT 28-3J24	4,915	8,220	1,635	(2) 11	55.3	3,981	2,451	2,832
AT 28-3K24	4,960	8,265	1,660	(2) 15	60.5	3,981	2,451	2,832
AT 28-3L24	4,990	8,290	1,675	(2) 18.5	65.0	3,981	2,451	2,832
AT 28-4H24	5,155	8,455	1,755	(2) 5.5	43.7	4,286	2,756	3,137
AT 28-4I24	5,180	8,480	1,770	(2) 7.5	47.8	4,286	2,756	3,137
AT 28-4J24	5,245	8,545	1,800	(2) 11	54.4	4,286	2,756	3,137
AT 28-4K24	5,290	8,590	1,825	(2) 15	59.5	4,286	2,756	3,137
AT 28-4L24	5,315	8,620	1,835	(2) 18.5	63.9	4,286	2,756	3,137
AT 28-4H24T	5,245	8,545	1,755	(2) 5.5	44.50	4,591	2,756	3,442
AT 28-4I24T	5,270	8,575	1,770	(2) 7.5	48.75	4,591	2,756	3,442
AT 28-4J24T	5,335	8,635	1,800	(2) 11	55.41	4,591	2,756	3,442
AT 28-4K24T	5,380	8,680	1,825	(2) 15	60.65	4,591	2,756	3,442
AT 28-4L24T	5,405	8,710	1,835	(2) 18.5	65.08	4,591	2,756	3,442
AT 28-5H24T	5,590	8,890	1,930	(2) 5.5	43.80	4,896	3,061	3,747
AT 28-5I24T	5,615	8,920	1,940	(2) 7.5	47.95	4,896	3,061	3,747
AT 28-5J24T	5,680	8,980	1,975	(2) 11	54.51	4,896	3,061	3,747
AT 28-5K24T	5,725	9,025	1,995	(2) 15	59.61	4,896	3,061	3,747
AT 28-5L24T	5,750	9,055	2,010	(2) 18.5	63.95	4,896	3,061	3,747
SLSF Addition*	-	-	-			738	738	

NOTE:
(1) An adequately sized bleed line must be installed in the cooling tower system to prevent build-up of impurities in the recirculated water.
(2) Do not use catalog drawings for certified prints. Dimensions and weights are subject to change.
(3) Adequate spacing must be allowed for access to the cooling tower. Refer to EVAPCO's Equipment Layout Manual.
(4) For 4 layers additional height is 738 mm and fan coil is removable for transport.

✧ Outlet connection extends beyond bottom flange.
† Height includes fan guard which ships factory mounted.
✦ Heaviest section is upper section.

Models: AT 28-2H28 to 28-5M28T

Two-Cell Cooling Towers

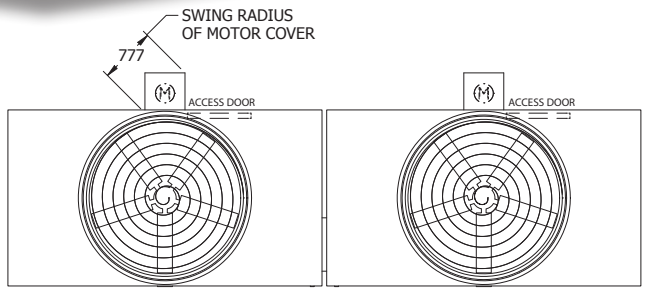

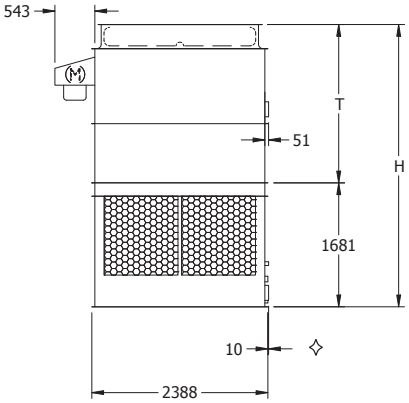

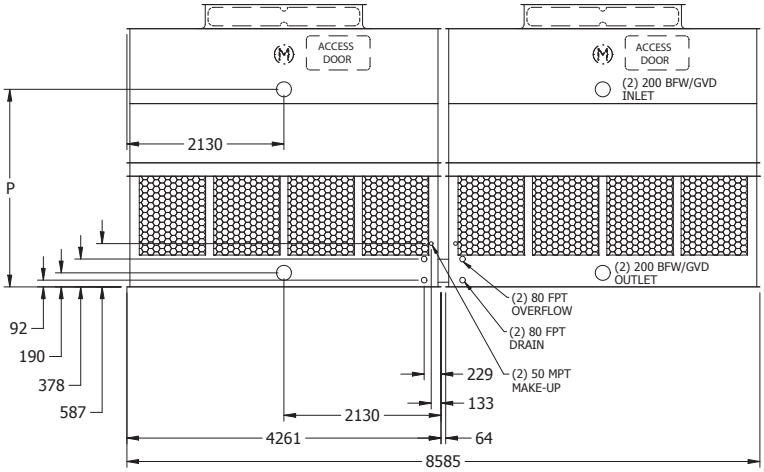

Model No.	Weights (kg)			Fan Motor (kW)	Air Flow (m^3/s)	Dimensions (mm)		
	Shipping	Operating	Heaviest Section✦			H†	T†	P
AT 28-2H28	4,980	8,855	1,545	(2) 5.5	50.5	3,829	2,146	2,680
AT 28-2I28	5,010	8,880	1,560	(2) 7.5	55.3	3,829	2,146	2,680
AT 28-2J28	5,070	8,945	1,590	(2) 11	62.8	3,829	2,146	2,680
AT 28-2K28	5,115	8,990	1,615	(2) 15	68.8	3,829	2,146	2,680
AT 28-2L28	5,145	9,015	1,630	(2) 18.5	73.8	3,829	2,146	2,680
AT 28-3H28	5,325	9,200	1,720	(2) 5.5	49.6	4,134	2,451	2,985
AT 28-3I28	5,350	9,225	1,735	(2) 7.5	54.2	4,134	2,451	2,985
AT 28-3J28	5,415	9,290	1,765	(2) 11	61.7	4,134	2,451	2,985
AT 28-3K28	5,460	9,335	1,785	(2) 15	67.5	4,134	2,451	2,985
AT 28-3L28	5,490	9,360	1,800	(2) 18.5	72.3	4,134	2,451	2,985
AT 28-3M28	5,505	9,380	1,810	(2) 22	76.7	4,134	2,451	2,985
AT 28-4H28	5,695	9,570	1,905	(2) 5.5	48.7	4,439	2,756	3,289
AT 28-4I28	5,725	9,600	1,920	(2) 7.5	53.3	4,439	2,756	3,289
AT 28-4J28	5,790	9,660	1,950	(2) 11	60.6	4,439	2,756	3,289
AT 28-4K28	5,835	9,705	1,975	(2) 15	66.4	4,439	2,756	3,289
AT 28-4L28	5,860	9,735	1,985	(2) 18.5	71.1	4,439	2,756	3,289
AT 28-4M28	5,880	9,750	1,995	(2) 22	75.4	4,439	2,756	3,289
AT 28-4H28T	5,790	9,665	1,905	(2) 5.5	49.60	4,743	2,756	3,594
AT 28-4I28T	5,820	9,695	1,920	(2) 7.5	54.27	4,743	2,756	3,594
AT 28-4J28T	5,885	9,755	1,950	(2) 11	61.78	4,743	2,756	3,594
AT 28-4K28T	5,930	9,800	1,975	(2) 15	67.63	4,743	2,756	3,594
AT 28-4L28T	5,955	9,830	1,985	(2) 18.5	72.49	4,743	2,756	3,594
AT 28-4M28T	5,975	9,845	1,995	(2) 22	76.79	4,743	2,756	3,594
AT 28-5H28T	6,185	10,060	2,100	(2) 5.5	48.80	5,048	3,061	3,899
AT 28-5I28T	6,215	10,090	2,115	(2) 7.5	53.42	5,048	3,061	3,899
AT 28-5J28T	6,280	10,150	2,150	(2) 11	60.79	5,048	3,061	3,899
AT 28-5K28T	6,325	10,195	2,170	(2) 15	66.54	5,048	3,061	3,899
AT 28-5L28T	6,350	10,225	2,185	(2) 18.5	71.31	5,048	3,061	3,899
AT 28-5M28T	6,370	10,240	2,195	(2) 22	75.56	5,048	3,061	3,899
SLSF Addition*	-	-	-			738	738	

NOTE: (1) An adequately sized bleed line must be installed in the cooling tower system to prevent build-up of impurities in the recirculated water.
(2) Do not use catalog drawings for certified prints. Dimensions and weights are subject to change.
(3) Adequate spacing must be allowed for access to the cooling tower. Refer to EVAPCO's Equipment Layout Manual.
(4) For 4 layers additional height is 738 mm and fan coil is removable for transport.

✧ Outlet connection extends beyond bottom flange.
† Height includes fan guard which ships factory mounted.
✦ Heaviest section is upper section.

Models: AT 210-2I24 to 210-5N24T

Two-Cell Cooling Towers

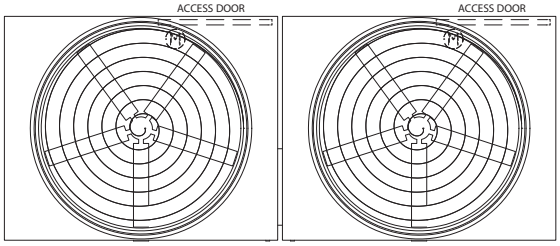

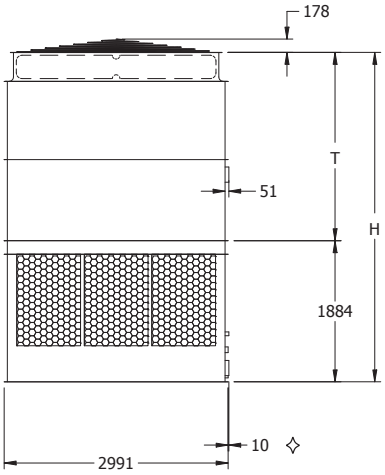

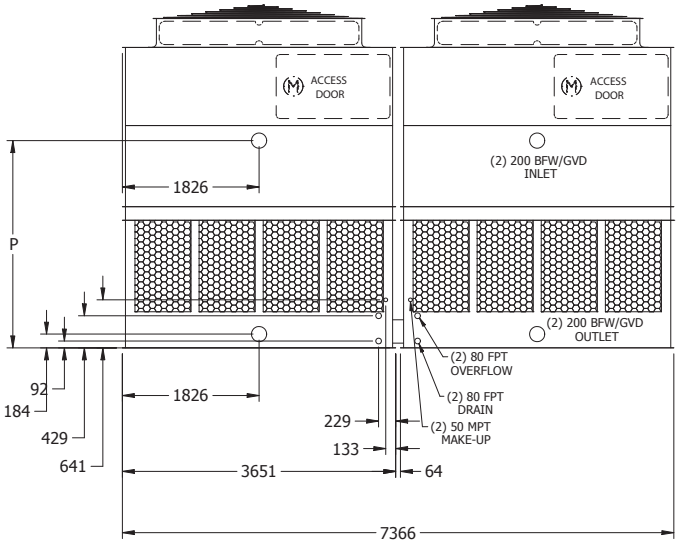

Model No.	Weights (kg)			Fan Motor (kW)	Air Flow (m^3/s)	Dimensions (mm)		
	Shipping	Operating	Heaviest Section✦			H†	T†	P
AT 210-2I24	6,025	10,525	1,905	(2) 7.5	61.1	4,401	2,515	2,769
AT 210-2J24	6,085	10,585	1,935	(2) 11	69.4	4,401	2,515	2,769
AT 210-2K24	6,135	10,630	1,960	(2) 15	76.0	4,401	2,515	2,769
AT 210-2L24	6,180	10,680	1,980	(2) 18.5	81.6	4,401	2,515	2,769
AT 210-2M24	6,270	10,770	2,030	(2) 22	86.5	4,401	2,515	2,769
AT 210-3I24	6,460	10,960	2,125	(2) 7.5	60.1	4,705	2,819	3,073
AT 210-3J24	6,525	11,020	2,155	(2) 11	68.2	4,705	2,819	3,073
AT 210-3K24	6,570	11,070	2,175	(2) 15	74.7	4,705	2,819	3,073
AT 210-3L24	6,615	11,115	2,200	(2) 18.5	80.1	4,705	2,819	3,073
AT 210-3M24	6,705	11,205	2,245	(2) 22	84.9	4,705	2,819	3,073
AT 210-4I24	6,840	11,340	2,315	(2) 7.5	59.1	5,010	3,124	3,378
AT 210-4J24	6,905	11,405	2,345	(2) 11	67.2	5,010	3,124	3,378
AT 210-4K24	6,950	11,450	2,370	(2) 15	73.5	5,010	3,124	3,378
AT 210-4L24	6,995	11,495	2,390	(2) 18.5	78.9	5,010	3,124	3,378
AT 210-4M24	7,085	11,585	2,435	(2) 22	83.5	5,010	3,124	3,378
AT 210-4N24	7,310	11,810	2,550	(2) 26	87.6	5,010	3,124	3,378
AT 210-4I24T	6,935	11,435	2,315	(2) 7.5	60.27	5,315	3,124	3,683
AT 210-4J24T	7,000	11,500	2,345	(2) 11	68.43	5,315	3,124	3,683
AT 210-4K24T	7,045	11,545	2,370	(2) 15	74.95	5,315	3,124	3,683
AT 210-4L24T	7,090	11,590	2,390	(2) 18.5	80.37	5,315	3,124	3,683
AT 210-4M24T	7,180	11,680	2,435	(2) 22	85.09	5,315	3,124	3,683
AT 210-4N24T	7,405	11,905	2,550	(2) 26	89.29	5,315	3,124	3,683
AT 210-5I24T	7,350	11,850	2,520	(2) 7.5	59.28	5,620	3,429	3,988
AT 210-5J24T	7,410	11,910	2,550	(2) 11	67.30	5,620	3,429	3,988
AT 210-5K24T	7,455	11,955	2,575	(2) 15	73.67	5,620	3,429	3,988
AT 210-5L24T	7,500	12,000	2,595	(2) 18.5	79.05	5,620	3,429	3,988
AT 210-5M24T	7,595	12,095	2,640	(2) 22	83.68	5,620	3,429	3,988
AT 210-5N24T	7,820	12,320	2,755	(2) 26	87.78	5,620	3,429	3,988
SLSF Addition*	635	635	318			546	546	

NOTE: (1) An adequately sized bleed line must be installed in the cooling tower system to prevent build-up of impurities in the recirculated water.
(2) Do not use catalog drawings for certified prints. Dimensions and weights are subject to change.
(3) Adequate spacing must be allowed for access to the cooling tower. Refer to EVAPCO's Equipment Layout Manual.

✧ Outlet connection extends beyond bottom flange.
† Height includes fan guard which ships factory mounted.
✦ Heaviest section is upper section.
* Additional weight and dimensions for optional SLSF.

Models: AT 210-2I36 to 210-5N36T

Two-Cell Cooling Towers

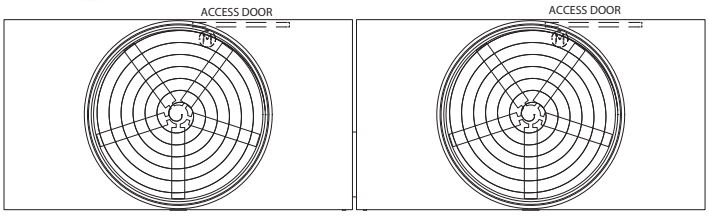

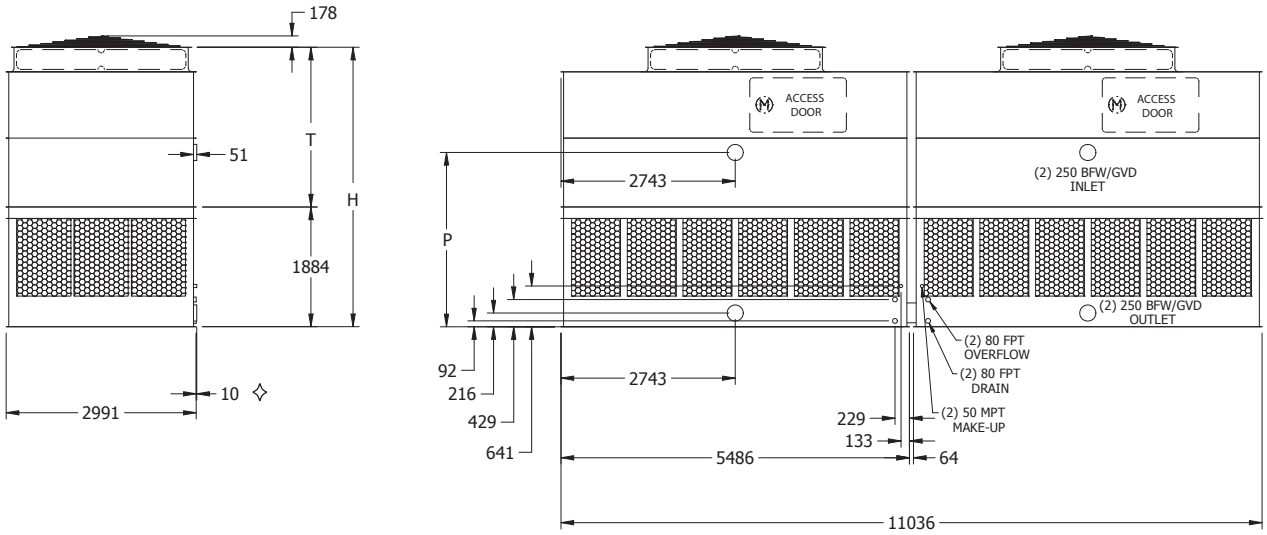

Model No.	Weights (kg)			Fan Motor (kW)	Air Flow (m^3/s)	Dimensions (mm)		
	Shipping	Operating	Heaviest Section✦			H†	T†	P
AT 210-2I36	8,365	15,260	2,560	(2) 7.5	81.2	4,401	2,515	2,743
AT 210-2J36	8,430	15,320	2,590	(2) 11	92.3	4,401	2,515	2,743
AT 210-2K36	8,475	15,370	2,615	(2) 15	101.2	4,401	2,515	2,743
AT 210-2L36	8,520	15,415	2,635	(2) 18.5	108.6	4,401	2,515	2,743
AT 210-2M36	8,610	15,505	2,680	(2) 22	115.2	4,401	2,515	2,743
AT 210-3I36	8,990	15,885	2,870	(2) 7.5	79.9	4,705	2,819	3,048
AT 210-3J36	9,055	15,950	2,905	(2) 11	90.9	4,705	2,819	3,048
AT 210-3K36	9,100	15,995	2,925	(2) 15	99.5	4,705	2,819	3,048
AT 210-3L36	9,145	16,040	2,950	(2) 18.5	106.8	4,705	2,819	3,048
AT 210-3M36	9,235	16,130	2,995	(2) 22	113.0	4,705	2,819	3,048
AT 210-3N36	9,460	16,355	3,105	(2) 30	123.7	4,705	2,819	3,048
AT 210-4I36	9,560	16,455	3,155	(2) 7.5	78.6	5,010	3,124	3,353
AT 210-4J36	9,625	16,520	3,190	(2) 11	89.4	5,010	3,124	3,353
AT 210-4K36	9,670	16,565	3,210	(2) 15	97.9	5,010	3,124	3,353
AT 210-4L36	9,715	16,610	3,235	(2) 18.5	105.1	5,010	3,124	3,353
AT 210-4M36	9,805	16,700	3,280	(2) 22	111.2	5,010	3,124	3,353
AT 210-4N36	10,035	16,930	3,395	(2) 30	121.7	5,010	3,124	3,353
AT 210-4I36T	9,670	16,565	3,155	(2) 7.5	80.09	5,315	3,124	3,658
AT 210-4J36T	9,735	16,630	3,190	(2) 11	91.09	5,315	3,124	3,658
AT 210-4K36T	9,780	16,675	3,210	(2) 15	99.77	5,315	3,124	3,658
AT 210-4L36T	9,825	16,720	3,235	(2) 18.5	107.08	5,315	3,124	3,658
AT 210-4M36T	9,915	16,810	3,280	(2) 22	113.41	5,315	3,124	3,658
AT 210-4N36T	10,140	17,035	3,395	(2) 30	124.07	5,315	3,124	3,658
AT 210-5I36T	10,255	17,150	3,450	(2) 7.5	78.86	5,620	3,429	3,962
AT 210-5J36T	10,320	17,215	3,480	(2) 11	89.67	5,620	3,429	3,962
AT 210-5K36T	10,365	17,260	3,505	(2) 15	98.21	5,620	3,429	3,962
AT 210-5L36T	10,410	17,305	3,525	(2) 18.5	105.39	5,620	3,429	3,962
AT 210-5M36T	10,500	17,395	3,570	(2) 22	111.57	5,620	3,429	3,962
AT 210-5N36T	10,725	17,620	3,685	(2) 30	122.05	5,620	3,429	3,962
SLSF Addition*	635	635	318			546	546	

NOTE: (1) An adequately sized bleed line must be installed in the cooling tower system to prevent build-up of impurities in the recirculated water.
(2) Do not use catalog drawings for certified prints. Dimensions and weights are subject to change.
(3) Adequate spacing must be allowed for access to the cooling tower. Refer to EVAPCO's Equipment Layout Manual.
(4) Optional Dual Fan units will have a "-DF" at the end of the model number in Spectrum. Fan kW and weights may vary.

✧ Outlet connection extends beyond bottom flange.
† Height includes fan guard which ships factory mounted.
✦ Heaviest section is upper section.
* Additional weight and dimensions for optional SLSF.

Models: AT 212-2F9 to 212-5J9T

Two-Cell Cooling Towers

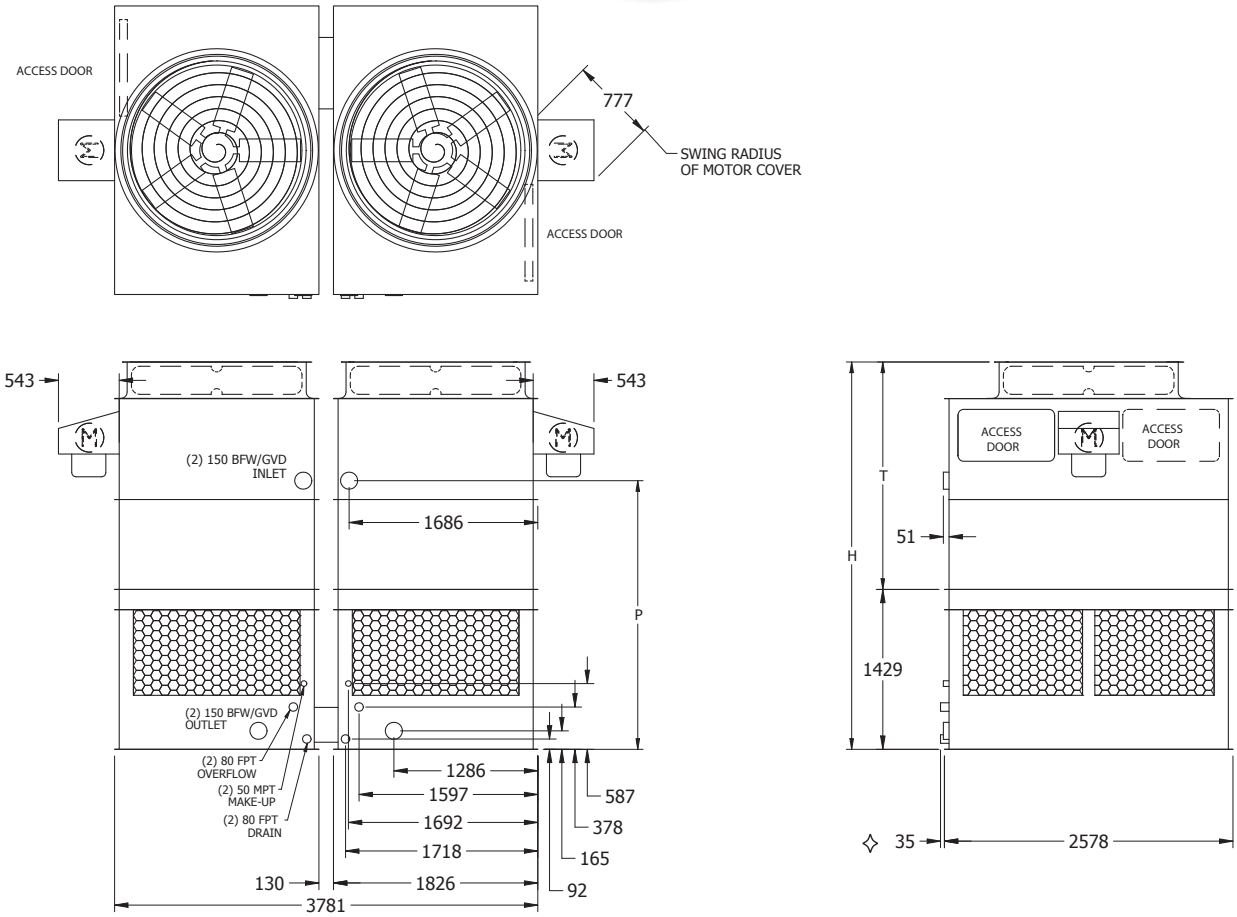

Model No.	Weights (kg)			Fan Motor (kW)	Air Flow (m^3/s)	Dimensions (mm)		
	Shipping	Operating	Heaviest Section✦			H†	T†	P
AT 212-2F9	2,885	4,735	905	(2) 2.2	21,3	3,461	2,032	2,400
AT 212-2G9	2,905	4,755	910	(2) 4	25,1	3,461	2,032	2,400
AT 212-2H9	2,940	4,790	930	(2) 5.5	28,6	3,461	2,032	2,400
AT 212-3F9	3,065	4,915	995	(2) 2.2	21,0	3,766	2,337	2,705
AT 212-3G9	3,085	4,935	1,000	(2) 4	24,7	3,766	2,337	2,705
AT 212-3H9	3,120	4,970	1,020	(2) 5.5	28,0	3,766	2,337	2,705
AT 212-3I9	3,150	5,000	1,035	(2) 7.5	30,7	3,766	2,337	2,705
AT 212-4F9	3,265	5,115	1,095	(2) 2.2	20,7	4,070	2,642	3,010
AT 212-4G9	3,285	5,135	1,100	(2) 4	24,3	4,070	2,642	3,010
AT 212-4H9	3,320	5,170	1,120	(2) 5.5	27,6	4,070	2,642	3,010
AT 212-4I9	3,350	5,200	1,135	(2) 7.5	30,2	4,070	2,642	3,010
AT 212-4J9	3,410	5,260	1,165	(2) 11	34,4	4,070	2,642	3,010
AT 212-4F9T	3,340	5,190	1,095	(2) 2.2	21,05	4,375	2,642	3,315
AT 212-4G9T	3,355	5,205	1,100	(2) 4	24,73	4,375	2,642	3,315
AT 212-4H9T	3,395	5,245	1,120	(2) 5.5	28,18	4,375	2,642	3,315
AT 212-4I9T	3,420	5,270	1,135	(2) 7.5	30,82	4,375	2,642	3,315
AT 212-4J9T	3,485	5,335	1,165	(2) 11	35,02	4,375	2,642	3,315
AT 212-5F9T	3,550	5,400	1,200	(2) 2.2	20,72	4,680	2,946	3,620
AT 212-5G9T	3,570	5,420	1,210	(2) 4	24,35	4,680	2,946	3,620
AT 212-5H9T	3,605	5,455	1,225	(2) 5.5	27,70	4,680	2,946	3,620
AT 212-5I9T	3,635	5,485	1,240	(2) 7.5	30,30	4,680	2,946	3,620
AT 212-5J9T	3,695	5,545	1,270	(2) 11	34,45	4,680	2,946	3,620
SLSF Addition*	136	136	68			330	330	

NOTE: (1) An adequately sized bleed line must be installed in the cooling tower system to prevent build-up of impurities in the recirculated water.
(2) Do not use catalog drawings for certified prints. Dimensions and weights are subject to change.
(3) Adequate spacing must be allowed for access to the cooling tower. Refer to EVAPCO's Equipment Layout Manual.

✧ Outlet connection extends beyond bottom flange.
† Height includes fan guard which ships factory mounted.
✦ Heaviest section is upper section.
* Additional weight and dimensions for optional SLSF.

Models: AT 212-2I24 to 212-5N24T

Two-Cell Cooling Towers

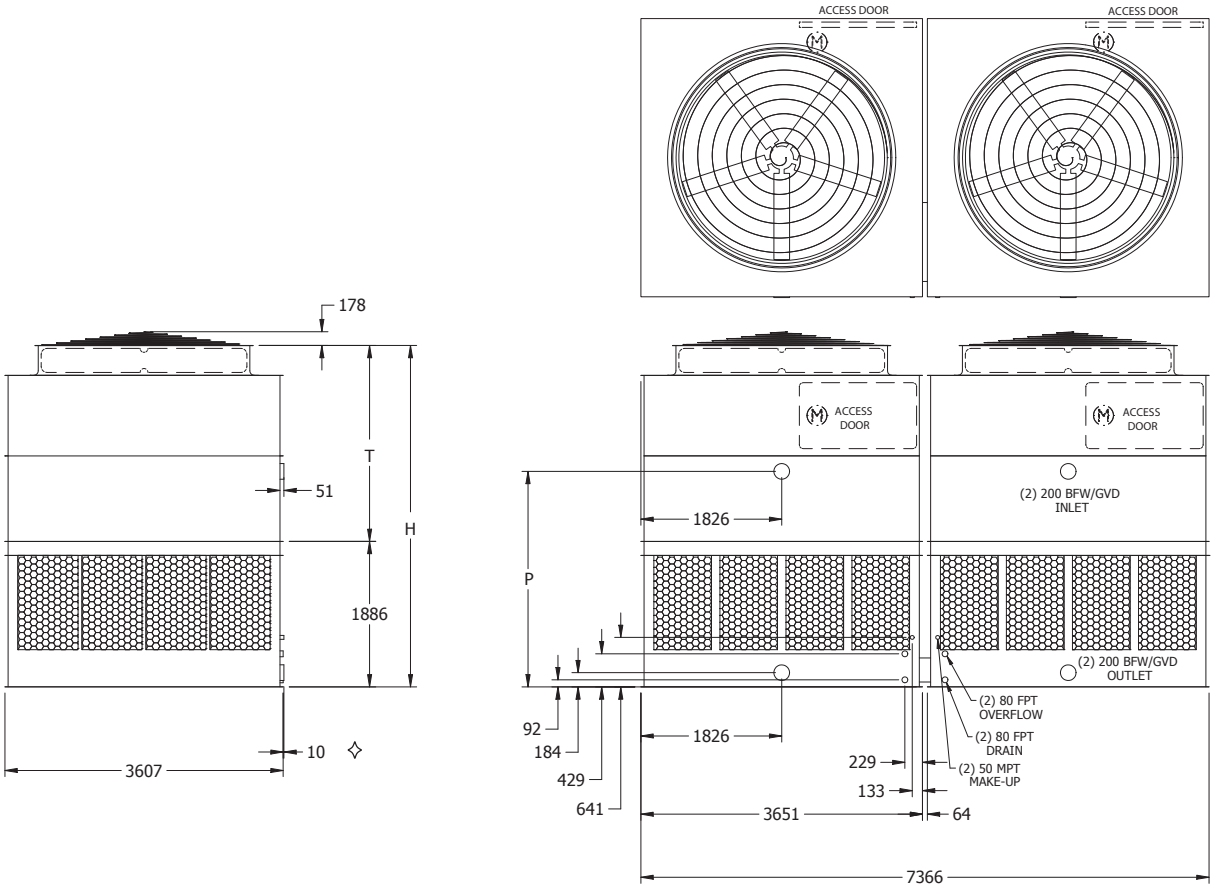

Model No.	Weights (kg)			Fan Motor (kW)	Air Flow (m^3/s)	Dimensions (mm)		
	Shipping	Operating	Heaviest Section✦			H†	T†	P
AT 212-2I24	6,715	12,345	2,205	(2) 7.5	67.5	4,426	2,540	2,794
AT 212-2J24	6,840	12,475	2,270	(2) 11	76.8	4,426	2,540	2,794
AT 212-2K24	6,885	12,520	2,290	(2) 15	84.1	4,426	2,540	2,794
AT 212-2L24	6,930	12,565	2,315	(2) 18.5	90.4	4,426	2,540	2,794
AT 212-2M24	7,020	12,655	2,360	(2) 22	95.8	4,426	2,540	2,794
AT 212-3I24	7,205	12,835	2,450	(2) 7.5	66.5	4,731	2,845	3,099
AT 212-3J24	7,330	12,965	2,515	(2) 11	75.5	4,731	2,845	3,099
AT 212-3K24	7,375	13,010	2,535	(2) 15	82.6	4,731	2,845	3,099
AT 212-3L24	7,420	13,055	2,560	(2) 18.5	88.6	4,731	2,845	3,099
AT 212-3M24	7,510	13,145	2,605	(2) 22	93.9	4,731	2,845	3,099
AT 212-4I24	7,650	13,280	2,670	(2) 7.5	65.4	5,036	3,150	3,404
AT 212-4J24	7,775	13,410	2,735	(2) 11	74.3	5,036	3,150	3,404
AT 212-4K24	7,820	13,455	2,760	(2) 15	81.4	5,036	3,150	3,404
AT 212-4L24	7,865	13,500	2,780	(2) 18.5	87.2	5,036	3,150	3,404
AT 212-4M24	7,955	13,590	2,825	(2) 22	92.3	5,036	3,150	3,404
AT 212-4N24	8,185	13,815	2,940	(2) 30	101.0	5,036	3,150	3,404
AT 212-4I24T	7,750	13,385	2,670	(2) 7.5	66.64	5,340	3,150	3,708
AT 212-4J24T	7,880	13,515	2,735	(2) 11	75.75	5,340	3,150	3,708
AT 212-4K24T	7,925	13,560	2,760	(2) 15	82.92	5,340	3,150	3,708
AT 212-4L24T	7,970	13,605	2,780	(2) 18.5	88.91	5,340	3,150	3,708
AT 212-4M24T	8,060	13,695	2,825	(2) 22	94.06	5,340	3,150	3,708
AT 212-4N24T	8,285	13,920	2,940	(2) 30	102.98	5,340	3,150	3,708
AT 212-5I24T	8,235	13,870	2,915	(2) 7.5	65.60	5,645	3,454	4,013
AT 212-5J24T	8,365	14,000	2,980	(2) 11	74.52	5,645	3,454	4,013
AT 212-5K24T	8,410	14,045	3,000	(2) 15	81.55	5,645	3,454	4,013
AT 212-5L24T	8,455	14,090	3,025	(2) 18.5	87.40	5,645	3,454	4,013
AT 212-5M24T	8,545	14,180	3,070	(2) 22	92.50	5,645	3,454	4,013
AT 212-5N24T	8,770	14,405	3,180	(2) 30	101.28	5,645	3,454	4,013
SLSF Addition*	635	635	318			546	546	

NOTE: (1) An adequately sized bleed line must be installed in the cooling tower system to prevent build-up of impurities in the recirculated water.
(2) Do not use catalog drawings for certified prints. Dimensions and weights are subject to change.
(3) Adequate spacing must be allowed for access to the cooling tower. Refer to EVAPCO's Equipment Layout Manual.

✧ Outlet connection extends beyond bottom flange.
† Height includes fan guard which ships factory mounted.
✦ Heaviest section is upper section.
* Additional weight and dimensions for optional SLSF.

Models: AT 212-2I28 to 212-5N28T

Two-Cell Cooling Towers

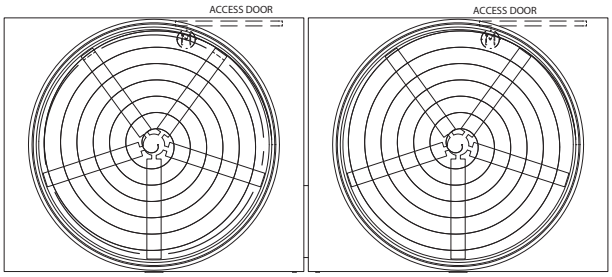

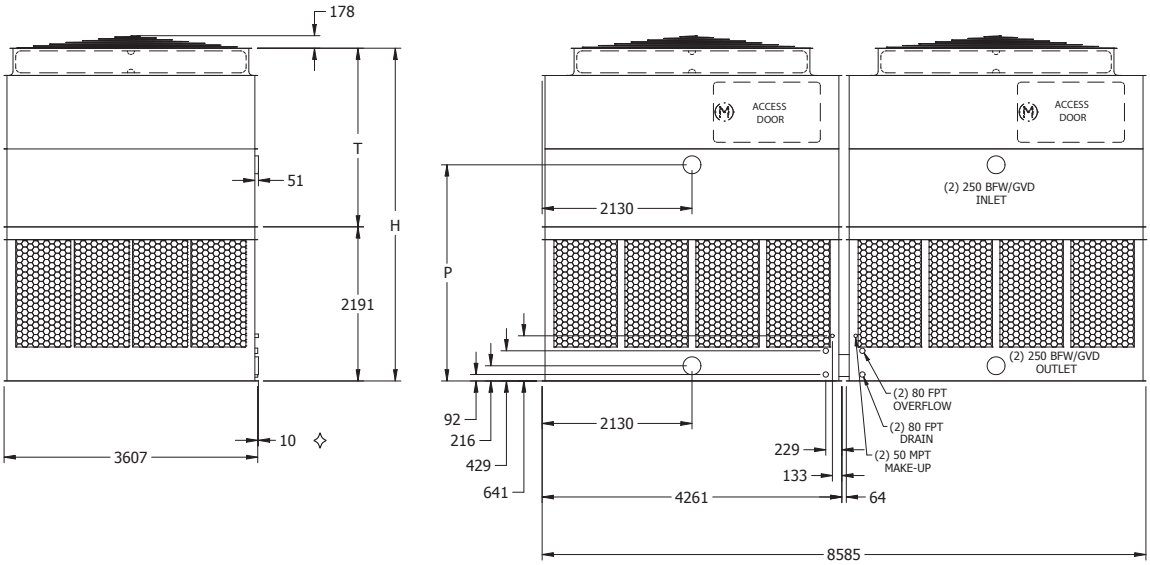

Model No.	Weights (kg)			Fan Motor (kW)	Air Flow (m^3/s)	Dimensions (mm)		
	Shipping	Operating	Heaviest Section✦			H†	T†	P
AT 212-2I28	7,630	14,280	2,430	(2) 7.5	73.4	4,731	2,540	3,073
AT 212-2J28	7,695	14,345	2,465	(2) 11	83.5	4,731	2,540	3,073
AT 212-2K28	7,745	14,395	2,490	(2) 15	91.6	4,731	2,540	3,073
AT 212-2L28	7,800	14,450	2,515	(2) 18.5	98.3	4,731	2,540	3,073
AT 212-2M28	7,865	14,515	2,550	(2) 22	104.2	4,731	2,540	3,073
AT 212-3I28	8,230	14,880	2,730	(2) 7.5	72.3	5,036	2,845	3,378
AT 212-3J28	8,290	14,940	2,760	(2) 11	82.1	5,036	2,845	3,378
AT 212-3K28	8,345	14,995	2,790	(2) 15	90.0	5,036	2,845	3,378
AT 212-3L28	8,400	15,050	2,815	(2) 18.5	96.5	5,036	2,845	3,378
AT 212-3M28	8,465	15,115	2,850	(2) 22	102.2	5,036	2,845	3,378
AT 212-3N28	8,700	15,350	2,965	(2) 30	111.9	5,036	2,845	3,378
AT 212-4I28	8,700	15,350	2,965	(2) 7.5	71.1	5,340	3,150	3,683
AT 212-4J28	8,765	15,415	3,000	(2) 11	80.8	5,340	3,150	3,683
AT 212-4K28	8,820	15,465	3,025	(2) 15	88.5	5,340	3,150	3,683
AT 212-4L28	8,870	15,520	3,055	(2) 18.5	95.0	5,340	3,150	3,683
AT 212-4M28	8,935	15,585	3,085	(2) 22	100.5	5,340	3,150	3,683
AT 212-4N28	9,170	15,820	3,200	(2) 30	109.9	5,340	3,150	3,683
AT 212-4I28T	8,865	15,515	2,965	(2) 7.5	72.44	5,798	3,150	4,140
AT 212-4J28T	8,925	15,575	3,000	(2) 11	82.35	5,798	3,150	4,140
AT 212-4K28T	8,980	15,630	3,025	(2) 15	90.24	5,798	3,150	4,140
AT 212-4L28T	9,035	15,685	3,055	(2) 18.5	96.80	5,798	3,150	4,140
AT 212-4M28T	9,100	15,750	3,085	(2) 22	102.46	5,798	3,150	4,140
AT 212-4N28T	9,335	15,985	3,200	(2) 30	112.04	5,798	3,150	4,140
AT 212-5I28T	9,410	16,060	3,240	(2) 7.5	71.31	6,102	3,454	4,445
AT 212-5J28T	9,475	16,125	3,275	(2) 11	81.03	6,102	3,454	4,445
AT 212-5K28T	9,530	16,180	3,300	(2) 15	88.82	6,102	3,454	4,445
AT 212-5L28T	9,585	16,235	3,325	(2) 18.5	95.24	6,102	3,454	4,445
AT 212-5M28T	9,650	16,300	3,360	(2) 22	100.81	6,102	3,454	4,445
AT 212-5N28T	9,885	16,535	3,475	(2) 30	110.20	6,102	3,454	4,445
SLSF Addition*	635	635	318			546	546	

NOTE: (1) An adequately sized bleed line must be installed in the cooling tower system to prevent build-up of impurities in the recirculated water.
(2) Do not use catalog drawings for certified prints. Dimensions and weights are subject to change.
(3) Adequate spacing must be allowed for access to the cooling tower. Refer to EVAPCO's Equipment Layout Manual.

✧ Outlet connection extends beyond bottom flange.
† Height includes fan guard which ships factory mounted.
✦ Heaviest section is upper section.
* Additional weight and dimensions for optional SLSF.

Models: AT 212-2J36F to 212-5P36FT

Two-Cell Cooling Towers

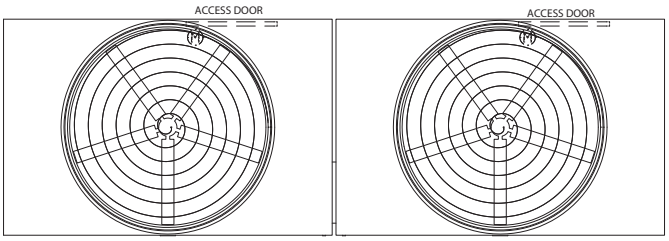

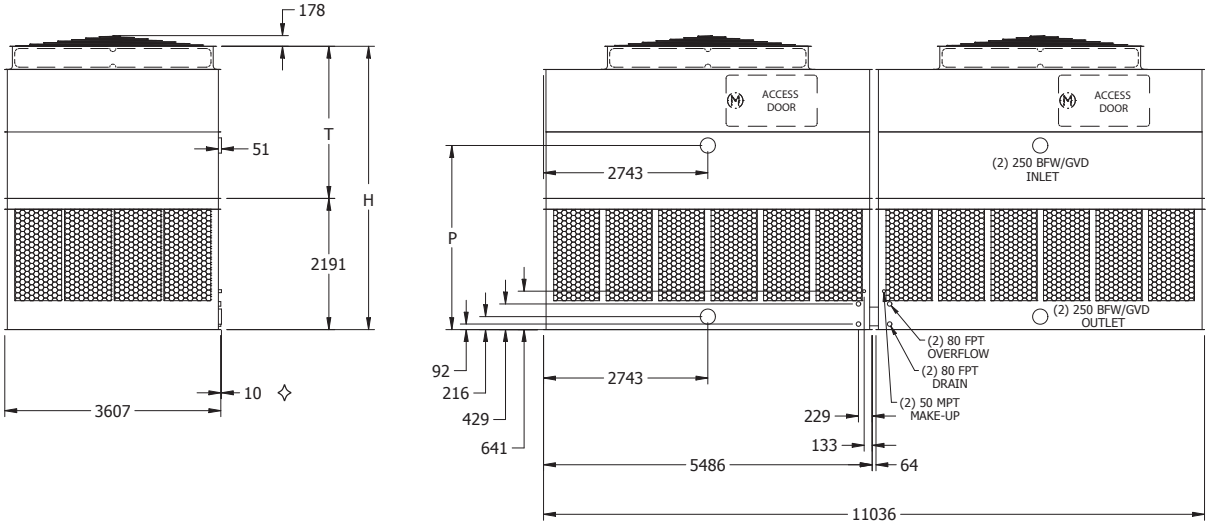

Model No.	Weights (kg)			Fan Motor (kW)	Air Flow (m^3/s)	Dimensions (mm)		
	Shipping	Operating	Heaviest Section✦			H†	T†	P
AT 212-2J36F	9,735	18,145	3,040	(2) 11	103.9	4,731	2,540	3,073
AT 212-2K36F	9,790	18,200	3,065	(2) 15	113.8	4,731	2,540	3,073
AT 212-2L36F	9,835	18,245	3,090	(2) 18.5	122.3	4,731	2,540	3,073
AT 212-2M36F	9,935	18,345	3,140	(2) 22	129.6	4,731	2,540	3,073
AT 212-2N36F	10,170	18,580	3,255	(2) 30	142.0	4,731	2,540	3,073
AT 212-3J36F	10,440	18,850	3,395	(2) 11	102.4	5,036	2,845	3,378
AT 212-3K36F	10,495	18,905	3,420	(2) 15	112.0	5,036	2,845	3,378
AT 212-3L36F	10,540	18,950	3,445	(2) 18.5	120.2	5,036	2,845	3,378
AT 212-3M36F	10,640	19,050	3,495	(2) 22	127.3	5,036	2,845	3,378
AT 212-3N36F	10,875	19,285	3,610	(2) 30	139.3	5,036	2,845	3,378
AT 212-3O36F	10,930	19,340	3,640	(2) 37	149.6	5,036	2,845	3,378
AT 212-4J36F	11,115	19,525	3,730	(2) 11	100.7	5,340	3,150	3,683
AT 212-4K36F	11,165	19,575	3,755	(2) 15	110.2	5,340	3,150	3,683
AT 212-4L36F	11,215	19,620	3,780	(2) 18.5	118.4	5,340	3,150	3,683
AT 212-4M36F	11,315	19,720	3,830	(2) 22	125.3	5,340	3,150	3,683
AT 212-4N36F	11,550	19,960	3,945	(2) 30	137.1	5,340	3,150	3,683
AT 212-4O36F	11,605	20,010	3,975	(2) 37	146.9	5,340	3,150	3,683
AT 212-4P36F	11,705	20,110	4,025	(2) 45	155.6	5,340	3,150	3,683
AT 212-4J36FT	11,315	19,725	3,730	(2) 11	102.74	5,798	3,150	4,140
AT 212-4K36FT	11,370	19,780	3,755	(2) 15	112.51	5,798	3,150	4,140
AT 212-4L36FT	11,415	19,825	3,780	(2) 18.5	120.82	5,798	3,150	4,140
AT 212-4M36FT	11,515	19,925	3,830	(2) 22	127.99	5,798	3,150	4,140
AT 212-4N36T	11,755	20,160	3,945	(2) 30	139.98	5,798	3,150	4,140
AT 212-4O36FT	11,805	20,215	3,975	(2) 37	150.03	5,798	3,150	4,140
AT 212-4P36FT	11,905	20,315	4,025	(2) 45	158.95	5,798	3,150	4,140
AT 212-5J36FT	12,000	20,410	4,070	(2) 11	101.14	6,102	3,454	4,445
AT 212-5K36FT	12,055	20,465	4,100	(2) 15	110.77	6,102	3,454	4,445
AT 212-5L36FT	12,100	20,510	4,120	(2) 18.5	118.93	6,102	3,454	4,445
AT 212-5M36FT	12,200	20,610	4,170	(2) 22	125.92	6,102	3,454	4,445
AT 212-5N36FT	12,440	20,845	4,290	(2) 30	137.71	6,102	3,454	4,445
AT 212-5O36FT	12,490	20,900	4,315	(2) 37	147.58	6,102	3,454	4,445
AT 212-5P36FT	12,590	21,000	4,365	(2) 45	156.36	6,102	3,454	4,445
SLSF Addition*	1.089	1.089	544			394	394	

NOTE: (1) An adequately sized bleed line must be installed in the cooling tower system to prevent build-up of impurities in the recirculated water.
(2) Do not use catalog drawings for certified prints. Dimensions and weights are subject to change.
(3) Adequate spacing must be allowed for access to the cooling tower. Refer to EVAPCO's Equipment Layout Manual.
(4) Optional Dual Fan units will have a "-DF" at the end of the model number in Spectrum. Fan kW and weights may vary.

✧ Outlet connection extends beyond bottom flange.
† Height includes fan guard which ships factory mounted.
✦ Heaviest section is upper section.
* Additional weight and dimensions for optional SLSF.

Models: AT 212-2K40F to 212-5P40FT

Two-Cell Cooling Towers

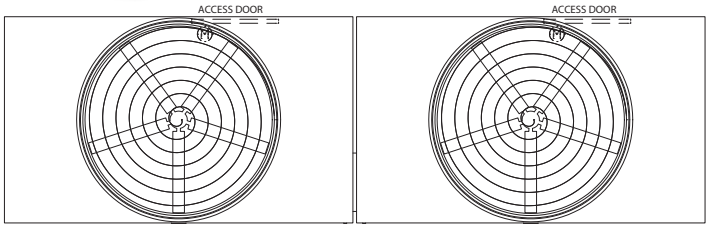

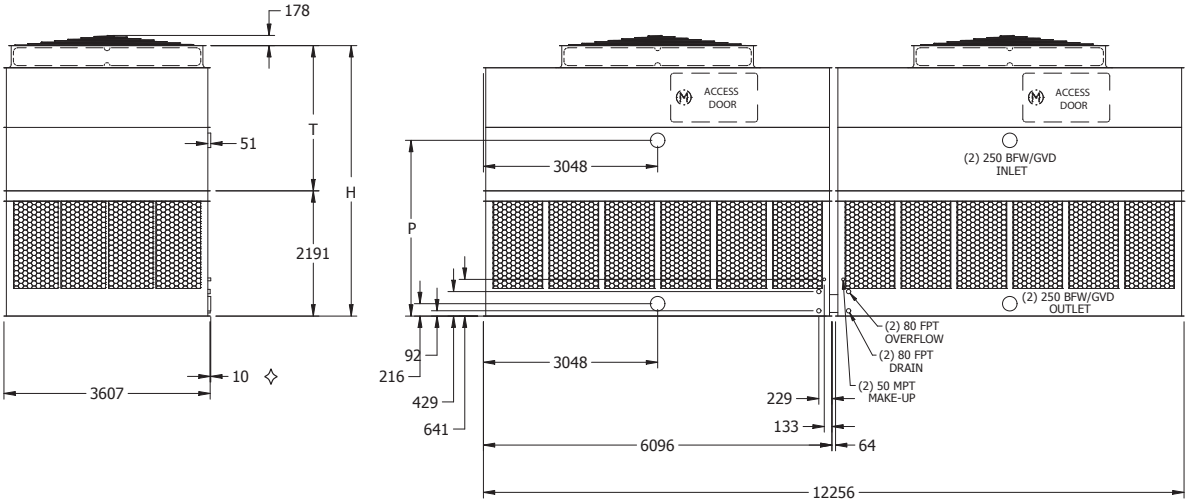

Model No.	Weights (kg)			Fan Motor (kW)	Air Flow (m^3/s)	Dimensions (mm)		
	Shipping	Operating	Heaviest Section✦			H†	T†	P
AT 212-2K40F	10,405	19,840	3,270	(2) 15	116.3	4,731	2,540	3,073
AT 212-2L40F	10,450	19,885	3,295	(2) 18.5	124.9	4,731	2,540	3,073
AT 212-2M40F	10,550	19,985	3,345	(2) 22	132.3	4,731	2,540	3,073
AT 212-2N40F	10,785	20,220	3,460	(2) 30	144.7	4,731	2,540	3,073
AT 212-2O40F	10,840	20,275	3,490	(2) 37	155.3	4,731	2,540	3,073
AT 212-3K40F	11,070	20,500	3,600	(2) 15	114.4	5,036	2,845	3,378
AT 212-3L40F	11,115	20,550	3,625	(2) 18.5	122.7	5,036	2,845	3,378
AT 212-3M40F	11,215	20,650	3,675	(2) 22	129.9	5,036	2,845	3,378
AT 212-3N40F	11,450	20,885	3,790	(2) 30	142.0	5,036	2,845	3,378
AT 212-3O40F	11,505	20,940	3,820	(2) 37	152.3	5,036	2,845	3,378
AT 212-4K40F	11,885	21,320	4,010	(2) 15	112.5	5,340	3,150	3,683
AT 212-4L40F	11,930	21,365	4,030	(2) 18.5	120.7	5,340	3,150	3,683
AT 212-4M40F	12,030	21,465	4,080	(2) 22	127.9	5,340	3,150	3,683
AT 212-4N40F	12,265	21,700	4,200	(2) 30	139.8	5,340	3,150	3,683
AT 212-4O40F	12,320	21,755	4,225	(2) 37	149.7	5,340	3,150	3,683
AT 212-4P40F	12,420	21,855	4,275	(2) 45	158.7	5,340	3,150	3,683
AT 212-4K40FT	12,095	21,530	4,010	(2) 15	114.82	5,798	3,150	4,140
AT 212-4L40FT	12,145	21,575	4,030	(2) 18.5	123.23	5,798	3,150	4,140
AT 212-4M40FT	12,240	21,675	4,080	(2) 22	130.49	5,798	3,150	4,140
AT 212-4N40FT	12,480	21,915	4,200	(2) 30	142.76	5,798	3,150	4,140
AT 212-4O40FT	12,535	21,965	4,225	(2) 37	152.96	5,798	3,150	4,140
AT 212-4P40FT	12,635	22,065	4,275	(2) 45	162.11	5,798	3,150	4,140
AT 212-5K40FT	12,845	22,280	4,385	(2) 15	113.03	6,102	3,454	4,445
AT 212-5L40FT	12,890	22,325	4,405	(2) 18.5	121.24	6,102	3,454	4,445
AT 212-5M40FT	12,990	22,425	4,455	(2) 22	128.46	6,102	3,454	4,445
AT 212-5N40FT	13,225	22,660	4,575	(2) 30	140.45	6,102	3,454	4,445
AT 212-5O40FT	13,280	22,715	4,600	(2) 37	150.50	6,102	3,454	4,445
AT 212-5P40FT	13,380	22,815	4,650	(2) 45	159.47	6,102	3,454	4,445
SLSF Addition*	1.089	1.089	544			394	394	

NOTE: (1) An adequately sized bleed line must be installed in the cooling tower system to prevent build-up of impurities in the recirculated water.
(2) Do not use catalog drawings for certified prints. Dimensions and weights are subject to change.
(3) Adequate spacing must be allowed for access to the cooling tower. Refer to EVAPCO's Equipment Layout Manual.

✧ Outlet connection extends beyond bottom flange.
† Height includes fan guard which ships factory mounted.
✦ Heaviest section is upper section.
* Additional weight and dimensions for optional SLSF.

Models: AT 214-2K36 to 214-4Q36

Two-Cell Cooling Towers

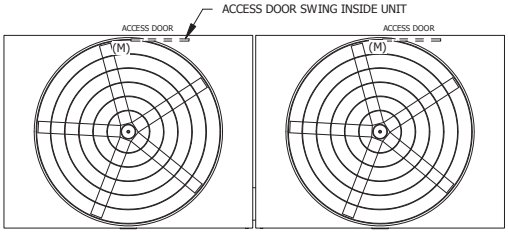

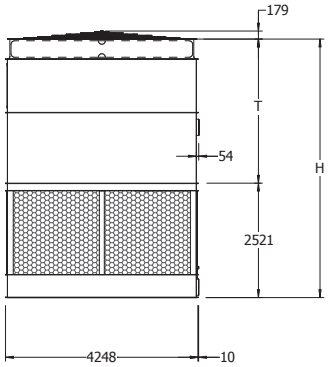

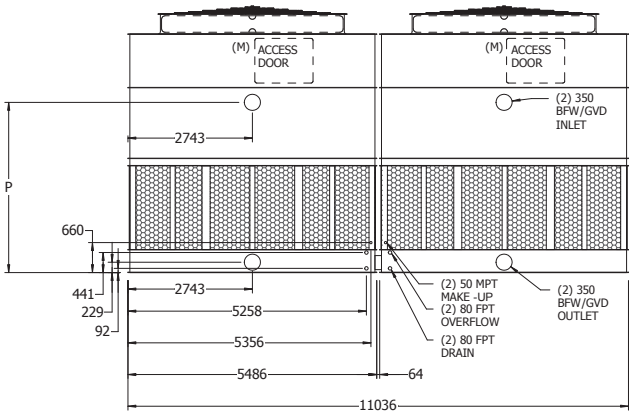

Model No.	Weights (kg)			Fan Motor (kW)	Air Flow (m^3/s)	Dimensions (mm)		
	Shipping	Operating	Heaviest Section✦			H†	T†	P
AT 214-2K36	14,005	22,815	4,705	(2) 15	122.7	5,394	2,870	3,448
AT 214-2L36	14,050	22,860	4,725	(2) 18.5	131.8	5,394	2,870	3,448
AT 214-2M36	14,070	22,880	4,735	(2) 22	139.7	5,394	2,870	3,448
AT 214-2N36	14,205	23,015	4,805	(2) 30	153.2	5,394	2,870	3,448
AT 214-2O36	14,525	23,335	4,960	(2) 37	164.5	5,394	2,870	3,448
AT 214-3K36	14,880	23,685	5,140	(2) 15	120.7	5,699	3,175	3,753
AT 214-3L36	14,925	23,730	5,160	(2) 18.5	129.6	5,699	3,175	3,753
AT 214-3M36	14,940	23,750	5,170	(2) 22	137.3	5,699	3,175	3,753
AT 214-3N36	15,075	23,885	5,240	(2) 30	150.4	5,699	3,175	3,753
AT 214-3O36	15,395	24,205	5,400	(2) 37	161.4	5,699	3,175	3,753
AT 214-3P36	15,550	24,360	5,475	(2) 45	171.0	5,699	3,175	3,753
AT 214-4K36	15,620	24,430	5,510	(2) 15	118.5	6,004	3,480	4,058
AT 214-4L36	15,665	24,475	5,535	(2) 18.5	127.2	6,004	3,480	4,058
AT 214-4M36	15,685	24,495	5,545	(2) 22	134.9	6,004	3,480	4,058
AT 214-4N36	15,820	24,630	5,610	(2) 30	147.9	6,004	3,480	4,058
AT 214-4O36	16,140	24,950	5,770	(2) 37	158.7	6,004	3,480	4,058
AT 214-4P36	16,295	25,100	5,845	(2) 45	168.2	6,004	3,480	4,058
AT 214-4Q36	16,510	25,320	5,955	(2) 55	180.4	6,004	3,480	4,058
SLSF Addition*	1,134	1,134	567			343	343	

NOTE: (1) An adequately sized bleed line must be installed in the cooling tower system to prevent build-up of impurities in the recirculated water.
(2) Do not use catalog drawings for certified prints. Dimensions and weights are subject to change.
(3) Adequate spacing must be allowed for access to the cooling tower. Refer to EVAPCO's Equipment Layout Manual.

✧ Outlet connection extends beyond bottom flange.
† Height includes fan guard which ships factory mounted.
✦ Heaviest section is upper section.
* Additional weight and dimensions for optional SLSF.

Models: AT 214-2K48 to 214-4R48*

Two-Cell Cooling Towers

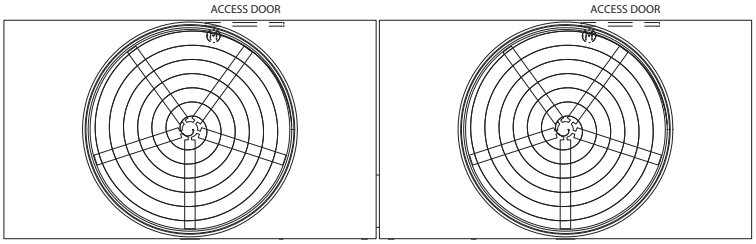

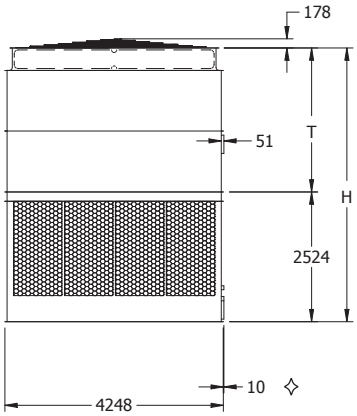

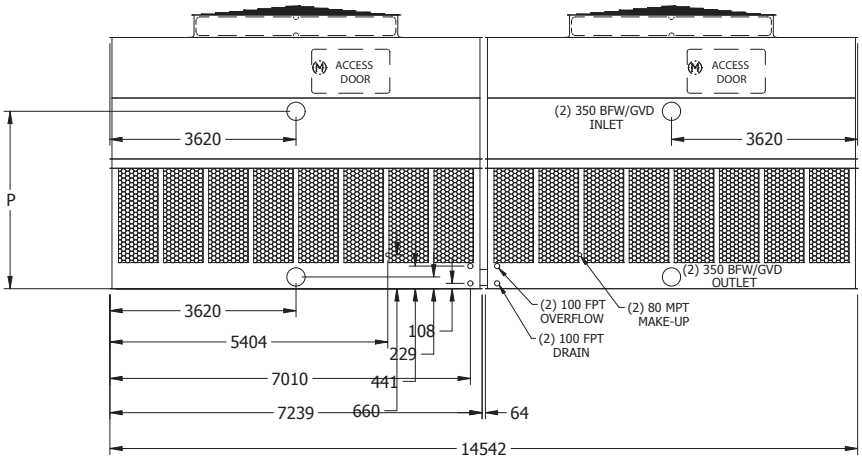

Model No.	Weights (kg)			Fan Motor (kW)	Air Flow (m^3/s)	Dimensions (mm)		
	Shipping	Operating	Heaviest Section✦			H†	T†	P
AT 214-2K48	15,160	29,540	4,810	(2) 15	148.0	5,324	2,800	3,451
AT 214-2L48	15,205	29,585	4,830	(2) 18.5	158.8	5,324	2,800	3,451
AT 214-2M48	15,225	29,600	4,840	(2) 22	168.4	5,324	2,800	3,451
AT 214-2N48	15,360	29,740	4,910	(2) 30	184.8	5,324	2,800	3,451
AT 214-2O48	15,675	30,055	5,065	(2) 37	198.4	5,324	2,800	3,451
AT 214-3K48	16,105	30,480	5,280	(2) 15	145.7	5,629	3,105	3,756
AT 214-3L48	16,150	30,525	5,300	(2) 18.5	156.3	5,629	3,105	3,756
AT 214-3M48	16,165	30,545	5,310	(2) 22	165.7	5,629	3,105	3,756
AT 214-3N48	16,300	30,680	5,380	(2) 30	181.4	5,629	3,105	3,756
AT 214-3O48	16,620	31,000	5,540	(2) 37	194.7	5,629	3,105	3,756
AT 214-3P48	16,775	31,155	5,615	(2) 45	206.1	5,629	3,105	3,756
AT 214-4K48	17,045	31,425	5,750	(2) 15	143.1	5,934	3,410	4,061
AT 214-4L48	17,090	31,470	5,775	(2) 18.5	153.6	5,934	3,410	4,061
AT 214-4M48	17,110	31,490	5,785	(2) 22	162.8	5,934	3,410	4,061
AT 214-4N48	17,245	31,625	5,850	(2) 30	178.4	5,934	3,410	4,061
AT 214-4O48	17,565	31,940	6,010	(2) 37	191.6	5,934	3,410	4,061
AT 214-4P48	17,715	32,095	6,085	(2) 45	202.8	5,934	3,410	4,061
AT 214-4Q48	17,935	32,315	6,195	(2) 55	217.4	5,934	3,410	4,061
AT 214-4R48*	18,335	32,715	6,395	(2) 75	238.2	5,934	3,410	4,061
SLSF Addition**	1,134	1,134	567			343	343	

* Model available with gear drive only. Motors and access doors located on 4,248 mm unit ends. Super Low Sound Fan is not available on this unit.

NOTE: (1) An adequately sized bleed line must be installed in the cooling tower system to prevent build-up of impurities in the recirculated water.
(2) Do not use catalog drawings for certified prints. Dimensions and weights are subject to change.
(3) Adequate spacing must be allowed for access to the cooling tower. Refer to EVAPCO's Equipment Layout Manual.

✧ Outlet connection extends beyond bottom flange.
† Height includes fan guard which ships factory mounted.
✦ Heaviest section is upper section.
** Additional weight and dimensions for optional SLSF.

Models: AT 214-5K52 to 214-5O52

Two-Cell Cooling Towers

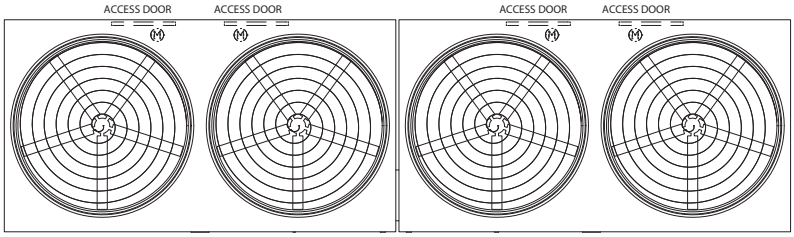

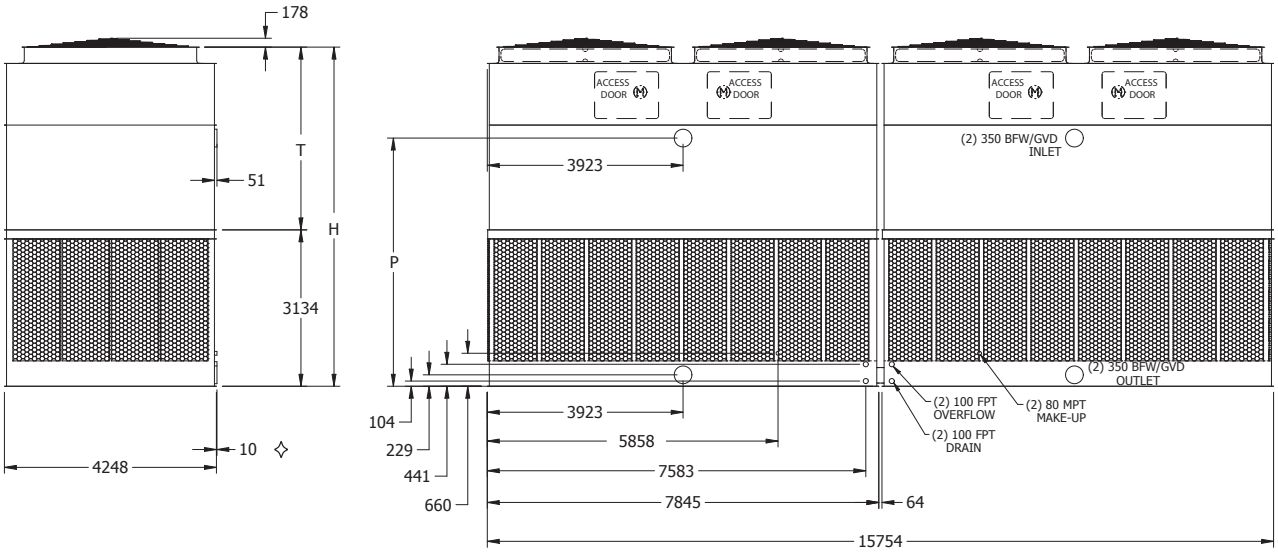

Model No.	Weights (kg)			Fan Motor (kW)	Air Flow (m^3/s)	Dimensions (mm)		
	Shipping	Operating	Heaviest Section✦			H†	T†	P
AT 214-5K52	22,155	37,420	8,010	(4) 15	185.7	6,795	3,661	4,972
AT 214-5L52	22,210	37,475	8,040	(4) 18.5	199.2	6,795	3,661	4,972
AT 214-5M52	22,300	37,565	8,085	(4) 22	210.9	6,795	3,661	4,972
AT 214-5N52	22,590	37,855	8,230	(4) 30	230.6	6,795	3,661	4,972
AT 214-5O52	22,605	37,875	8,235	(4) 37	247.2	6,795	3,661	4,972
SLSF Addition*	✤	2,177	✤			394	394	

NOTE: (1) An adequately sized bleed line must be installed in the cooling tower system to prevent build-up of impurities in the recirculated water.
(2) Do not use catalog drawings for certified prints. Dimensions and weights are subject to change.
(3) Adequate spacing must be allowed for access to the cooling tower. Refer to EVAPCO's Equipment Layout Manual.

✧ Outlet connection extends beyond bottom flange.
† Height includes fan guard which ships factory mounted.
* Additional weight and dimensions for optional SLSF.
✦ Heaviest section is upper section.
✤ Please consult the factory for additional information regarding shipping and section weight changes.

Models: AT 215-2F9 to 215-5J9T

Two-Cell Cooling Towers

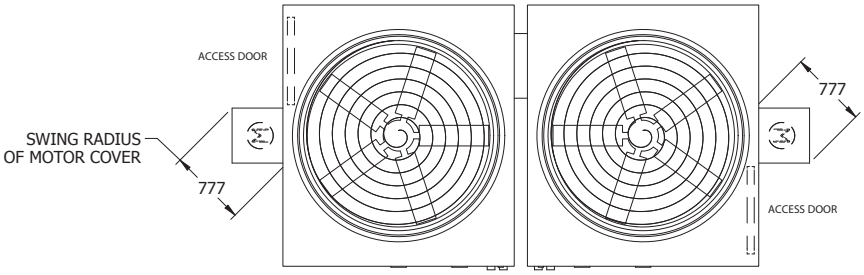

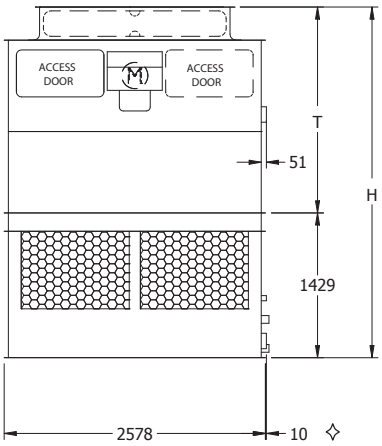

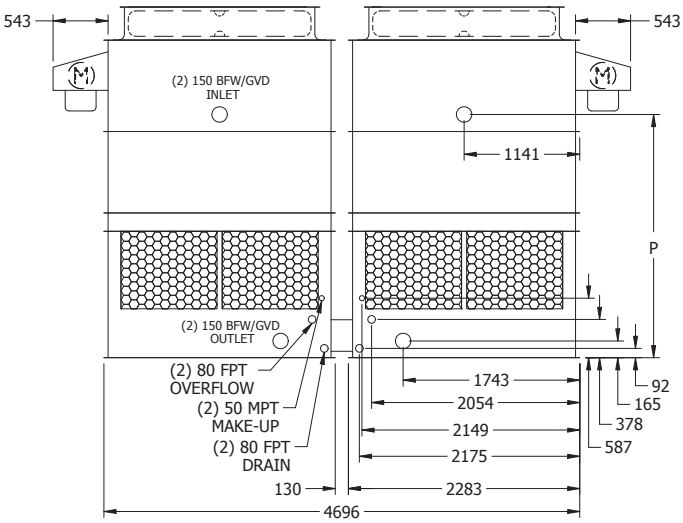

Model No.	Weights (kg)			Fan Motor (kW)	Air Flow (m^3/s)	Dimensions (mm)		
	Shipping	Operating	Heaviest Section✦			H†	T†	P
AT 215-2F9	3,265	5,460	1,025	(2) 2.2	25.1	3,461	2,032	2,400
AT 215-2G9	3,285	5,480	1,035	(2) 4	29.5	3,461	2,032	2,400
AT 215-2H9	3,320	5,515	1,050	(2) 5.5	33.7	3,461	2,032	2,400
AT 215-2I9	3,350	5,545	1,065	(2) 7.5	37.0	3,461	2,032	2,400
AT 215-3F9	3,475	5,670	1,130	(2) 2.2	24.8	3,766	2,337	2,705
AT 215-3G9	3,495	5,690	1,140	(2) 4	29.1	3,766	2,337	2,705
AT 215-3H9	3,530	5,725	1,155	(2) 5.5	33.1	3,766	2,337	2,705
AT 215-3I9	3,555	5,750	1,170	(2) 7.5	36.3	3,766	2,337	2,705
AT 215-3J9	3,610	5,805	1,195	(2) 11	41.3	3,766	2,337	2,705
AT 215-4F9	3,720	5,915	1,250	(2) 2.2	24.4	4,070	2,642	3,010
AT 215-4G9	3,740	5,935	1,260	(2) 4	28.6	4,070	2,642	3,010
AT 215-4H9	3,775	5,970	1,280	(2) 5.5	32.6	4,070	2,642	3,010
AT 215-4I9	3,800	5,995	1,295	(2) 7.5	35.7	4,070	2,642	3,010
AT 215-4J9	3,855	6,050	1,320	(2) 11	40.6	4,070	2,642	3,010
AT 215-4F9T	3,795	5,990	1,250	(2) 2.2	24.82	4,375	2,642	3,315
AT 215-4G9T	3,815	6,010	1,260	(2) 4	29.17	4,375	2,642	3,315
AT 215-4H9T	3,850	6,045	1,280	(2) 5.5	33.23	4,375	2,642	3,315
AT 215-4I9T	3,880	6,075	1,295	(2) 7.5	36.39	4,375	2,642	3,315
AT 215-4J9T	3,935	6,130	1,320	(2) 11	41.39	4,375	2,642	3,315
AT 215-5F9T	4,045	6,240	1,375	(2) 2.2	24.40	4,680	2,946	3,620
AT 215-5G9T	4,065	6,260	1,385	(2) 4	28.69	4,680	2,946	3,620
AT 215-5H9T	4,100	6,295	1,405	(2) 5.5	32.66	4,680	2,946	3,620
AT 215-5I9T	4,130	6,325	1,415	(2) 7.5	35.77	4,680	2,946	3,620
AT 215-5J9T	4,180	6,380	1,445	(2) 11	40.68	4,680	2,946	3,620
SLSF Addition*	136	136	68			432	432	

NOTE: (1) An adequately sized bleed line must be installed in the cooling tower system to prevent build-up of impurities in the recirculated water.
(2) Do not use catalog drawings for certified prints. Dimensions and weights are subject to change.
(3) Adequate spacing must be allowed for access to the cooling tower. Refer to EVAPCO's Equipment Layout Manual.

✧ Outlet connection extends beyond bottom flange.
† Height includes fan guard which ships factory mounted.
✦ Heaviest section is upper section.
* Additional weight and dimensions for optional SLSF.

Models: AT 216-2H11 to 216-5K11T

Two-Cell Cooling Towers

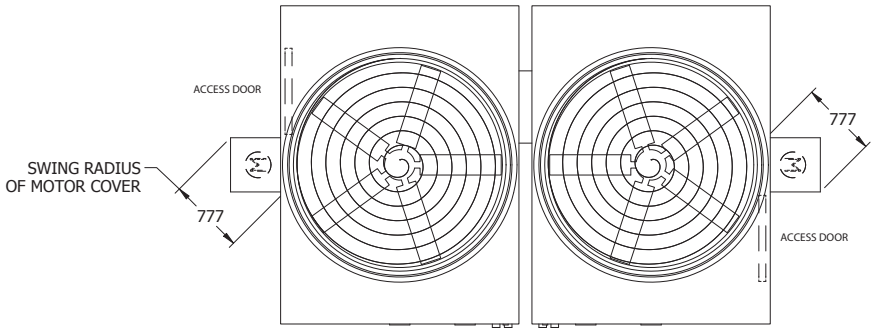

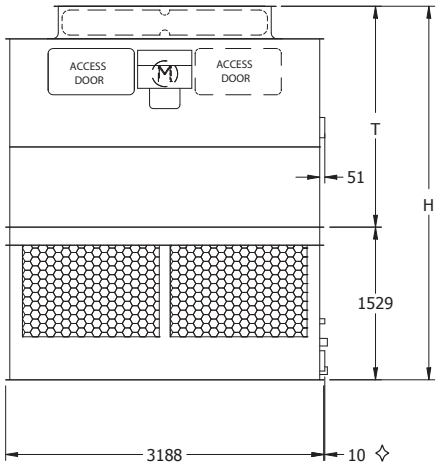

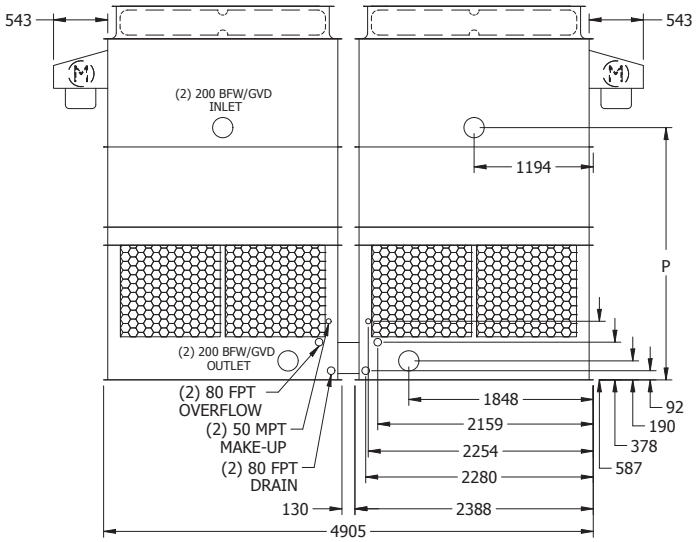

Model No.	Weights (kg)			Fan Motor (kW)	Air Flow (m^3/s)	Dimensions (mm)		
	Shipping	Operating	Heaviest Section✦			H†	T†	P
AT 216-2H11	4,130	6,960	1,310	(2) 5.5	41.2	3,743	2,213	2,594
AT 216-2I11	4,155	6,985	1,325	(2) 7.5	45.1	3,743	2,213	2,594
AT 216-2J11	4,220	7,050	1,355	(2) 11	51.2	3,743	2,213	2,594
AT 216-2K11	4,265	7,095	1,380	(2) 15	56.1	3,743	2,213	2,594
AT 216-3H11	4,390	7,220	1,440	(2) 5.5	40.4	4,048	2,518	2,899
AT 216-3I11	4,420	7,250	1,455	(2) 7.5	44.2	4,048	2,518	2,899
AT 216-3J11	4,480	7,310	1,490	(2) 11	50.2	4,048	2,518	2,899
AT 216-3K11	4,525	7,355	1,510	(2) 15	55.0	4,048	2,518	2,899
AT 216-4H11	4,690	7,520	1,590	(2) 5.5	39.7	4,353	2,823	3,204
AT 216-4I11	4,715	7,550	1,605	(2) 7.5	43.5	4,353	2,823	3,204
AT 216-4J11	4,780	7,610	1,635	(2) 11	49.4	4,353	2,823	3,204
AT 216-4K11	4,825	7,655	1,660	(2) 15	54.0	4,353	2,823	3,204
AT 216-4H11T	4,770	7,600	1,590	(2) 5.5	40.49	4,658	2,823	3,508
AT 216-4I11T	4,800	7,630	1,605	(2) 7.5	44.32	4,658	2,823	3,508
AT 216-4J11T	4,865	7,695	1,635	(2) 11	50.36	4,658	2,823	3,508
AT 216-4K11T	4,910	7,740	1,660	(2) 15	55.08	4,658	2,823	3,508
AT 216-5H11T	5,080	7,910	1,745	(2) 5.5	39.83	4,963	3,127	3,813
AT 216-5I11T	5,105	7,940	1,760	(2) 7.5	43.61	4,963	3,127	3,813
AT 216-5J11T	5,170	8,000	1,790	(2) 11	49.51	4,963	3,127	3,813
AT 216-5K11T	5,215	8,045	1,815	(2) 15	54.13	4,963	3,127	3,813
SLSF Addition*	-	-	-			738	738	

NOTE: (1) An adequately sized bleed line must be installed in the cooling tower system to prevent build-up of impurities in the recirculated water.
(2) Do not use catalog drawings for certified prints. Dimensions and weights are subject to change.
(3) Adequate spacing must be allowed for access to the cooling tower. Refer to EVAPCO's Equipment Layout Manual.
(4) For 4 layers additional height is 738 mm and fan coil is removable for transport.

✧ Outlet connection extends beyond bottom flange.
† Height includes fan guard which ships factory mounted.
✦ Heaviest section is upper section.

Models: AT 216-2H14 to 216-5M14T

Two-Cell Cooling Towers

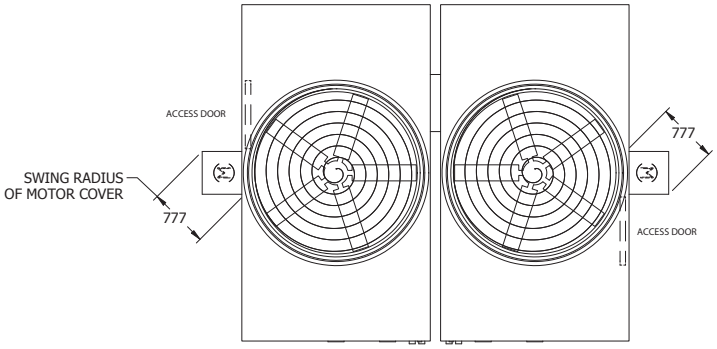

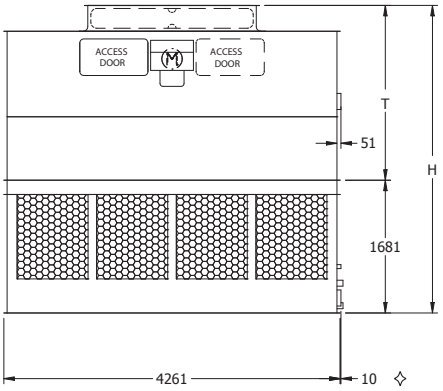

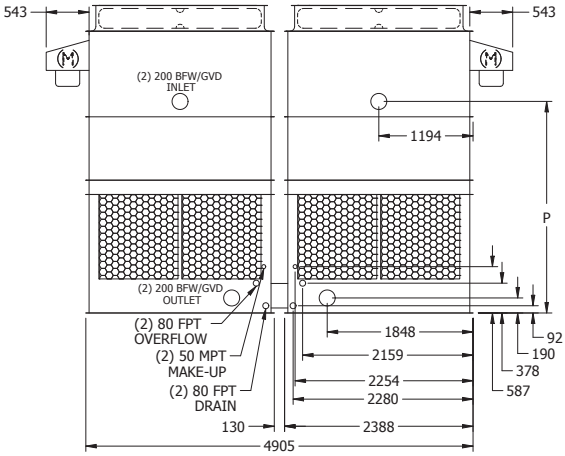

Model No.	Weights (kg)			Fan Motor (kW)	Air Flow (m^3/s)	Dimensions (mm)		
	Shipping	Operating	Heaviest Section✦			H†	T†	P
AT 216-2H14	4,960	8,835	1,545	(2) 5.5	50.4	3,896	2,213	2,746
AT 216-2I14	4,990	8,865	1,560	(2) 7.5	55.2	3,896	2,213	2,746
AT 216-2J14	5,055	8,925	1,590	(2) 11	62.7	3,896	2,213	2,746
AT 216-2K14	5,100	8,970	1,615	(2) 15	68.7	3,896	2,213	2,746
AT 216-2L14	5,125	9,000	1,630	(2) 18.5	73.7	3,896	2,213	2,746
AT 216-3H14	5,305	9,180	1,720	(2) 5.5	49.5	4,201	2,518	3,051
AT 216-3I14	5,335	9,210	1,735	(2) 7.5	54.3	4,201	2,518	3,051
AT 216-3J14	5,400	9,270	1,765	(2) 11	61.6	4,201	2,518	3,051
AT 216-3K14	5,445	9,315	1,785	(2) 15	67.4	4,201	2,518	3,051
AT 216-3L14	5,470	9,345	1,800	(2) 18.5	72.3	4,201	2,518	3,051
AT 216-3M14	5,490	9,360	1,810	(2) 22	76.6	4,201	2,518	3,051
AT 216-4H14	5,680	9,555	1,905	(2) 5.5	48.6	4,505	2,823	3,356
AT 216-4I14	5,705	9,580	1,920	(2) 7.5	53.3	4,505	2,823	3,356
AT 216-4J14	5,770	9,645	1,950	(2) 11	60.6	4,505	2,823	3,356
AT 216-4K14	5,815	9,690	1,975	(2) 15	66.3	4,505	2,823	3,356
AT 216-4L14	5,840	9,715	1,985	(2) 18.5	71.0	4,505	2,823	3,356
AT 216-4M14	5,860	9,735	1,995	(2) 22	75.3	4,505	2,823	3,356
AT 216-4H14T	5,765	9,640	1,905	(2) 5.5	49.51	4,810	2,823	3,661
AT 216-4I14T	5,790	9,665	1,920	(2) 7.5	54.32	4,810	2,823	3,661
AT 216-4J14T	5,855	9,730	1,950	(2) 11	61.68	4,810	2,823	3,661
AT 216-4K14T	5,900	9,775	1,975	(2) 15	67.54	4,810	2,823	3,661
AT 216-4L14T	5,930	9,800	1,985	(2) 18.5	72.40	4,810	2,823	3,661
AT 216-4M14T	5,945	9,820	1,995	(2) 22	76.74	4,810	2,823	3,661
AT 216-5H14T	6,160	10,035	2,100	(2) 5.5	48.75	5,115	3,127	3,966
AT 216-5I14T	6,185	10,060	2,115	(2) 7.5	53.47	5,115	3,127	3,966
AT 216-5J14T	6,250	10,125	2,150	(2) 11	60.74	5,115	3,127	3,966
AT 216-5K14T	6,295	10,170	2,170	(2) 15	66.45	5,115	3,127	3,966
AT 216-5L14T	6,325	10,195	2,185	(2) 18.5	71.22	5,115	3,127	3,966
AT 216-5M14T	6,340	10,215	2,195	(2) 22	75.46	5,115	3,127	3,966
SLSF Addition*	-	-	-			738	738	

NOTE: (1) An adequately sized bleed line must be installed in the cooling tower system to prevent build-up of impurities in the recirculated water.
(2) Do not use catalog drawings for certified prints. Dimensions and weights are subject to change.
(3) Adequate spacing must be allowed for access to the cooling tower. Refer to EVAPCO's Equipment Layout Manual.
(4) For 4 layers additional height is 738 mm and fan coil is removable for transport.

✧ Outlet connection extends beyond bottom flange.
† Height includes fan guard which ships factory mounted.
✦ Heaviest section is upper section.

Models: AT 220-2I12 to 220-5N12T

Two-Cell Cooling Towers

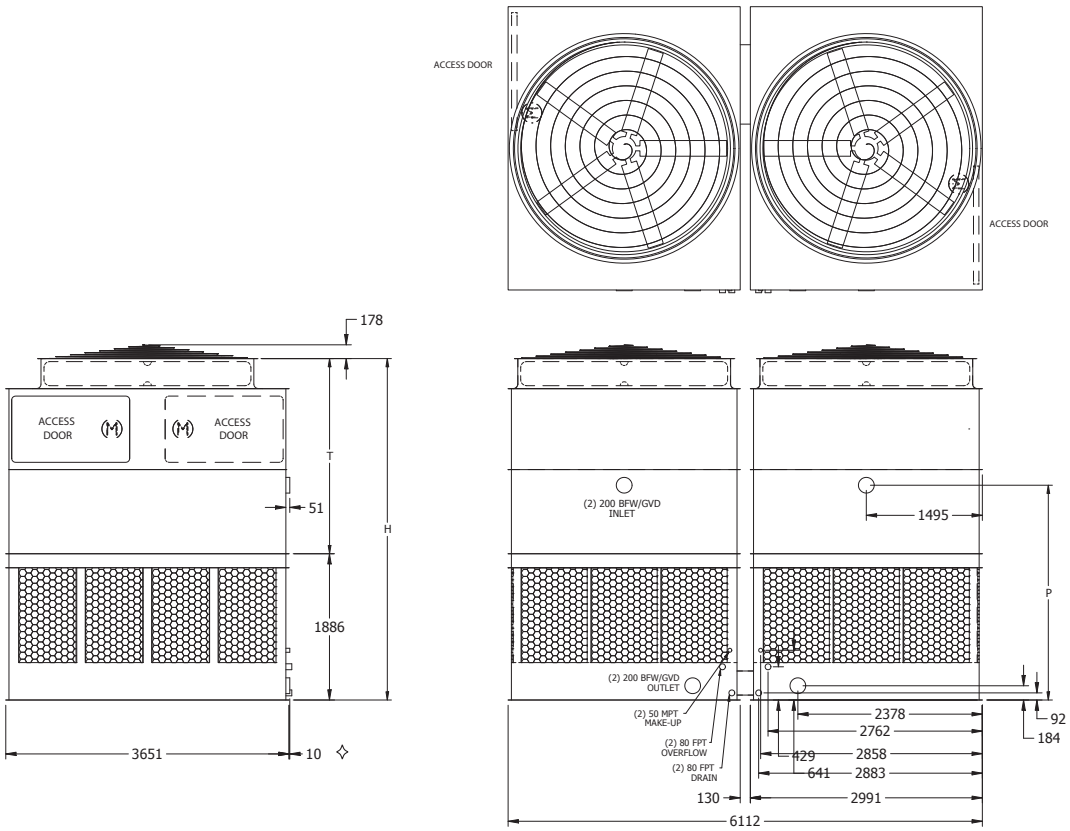

Model No.	Weights (kg)			Fan Motor (kW)	Air Flow (m^3/s)	Dimensions (mm)		
	Shipping	Operating	Heaviest Section✦			H†	T†	P
AT 220-2I12	6,035	10,530	1,905	(2) 7.5	60.8	4,401	2,515	2,769
AT 220-2J12	6,095	10,595	1,935	(2) 11	69.0	4,401	2,515	2,769
AT 220-2K12	6,140	10,640	1,960	(2) 15	75.7	4,401	2,515	2,769
AT 220-2L12	6,185	10,685	1,980	(2) 18.5	81.3	4,401	2,515	2,769
AT 220-2M12	6,280	10,775	2,030	(2) 22	86.1	4,401	2,515	2,769
AT 220-3I12	6,470	10,970	2,125	(2) 7.5	59.8	4,705	2,819	3,073
AT 220-3J12	6,530	11,030	2,155	(2) 11	67.9	4,705	2,819	3,073
AT 220-3K12	6,575	11,075	2,175	(2) 15	74.3	4,705	2,819	3,073
AT 220-3L12	6,620	11,120	2,200	(2) 18.5	79.7	4,705	2,819	3,073
AT 220-3M12	6,715	11,215	2,245	(2) 22	84.5	4,705	2,819	3,073
AT 220-4I12	6,850	11,350	2,315	(2) 7.5	58.9	5,010	3,124	3,378
AT 220-4J12	6,915	11,410	2,345	(2) 11	66.8	5,010	3,124	3,378
AT 220-4K12	6,960	11,460	2,370	(2) 15	73.2	5,010	3,124	3,378
AT 220-4L12	7,005	11,505	2,390	(2) 18.5	78.5	5,010	3,124	3,378
AT 220-4M12	7,095	11,595	2,435	(2) 22	83.1	5,010	3,124	3,378
AT 220-4N12	7,320	11,820	2,550	(2) 26	87.2	5,010	3,124	3,378
AT 220-4I12T	6,975	11,475	2,315	(2) 7.5	59.98	5,315	3,124	3,683
AT 220-4J12T	7,040	11,540	2,345	(2) 11	68.10	5,315	3,124	3,683
AT 220-4K12T	7,085	11,585	2,370	(2) 15	74.57	5,315	3,124	3,683
AT 220-4L12T	7,130	11,630	2,390	(2) 18.5	80.00	5,315	3,124	3,683
AT 220-4M12T	7,220	11,720	2,435	(2) 22	84.71	5,315	3,124	3,683
AT 220-4N12T	7,450	11,950	2,550	(2) 26	88.87	5,315	3,124	3,683
AT 220-5I12T	7,390	11,890	2,520	(2) 7.5	58.99	5,620	3,429	3,988
AT 220-5J12T	7,455	11,950	2,550	(2) 11	67.02	5,620	3,429	3,988
AT 220-5K12T	7,500	12,000	2,575	(2) 15	73.34	5,620	3,429	3,988
AT 220-5L12T	7,545	12,045	2,595	(2) 18.5	78.67	5,620	3,429	3,988
AT 220-5M12T	7,635	12,135	2,640	(2) 22	83.30	5,620	3,429	3,988
AT 220-5N12T	7,860	12,360	2,755	(2) 26	87.40	5,620	3,429	3,988
SLSF Addition*	635	635	318			546	546	

NOTE: (1) An adequately sized bleed line must be installed in the cooling tower system to prevent build-up of impurities in the recirculated water.
(2) Do not use catalog drawings for certified prints. Dimensions and weights are subject to change.
(3) Adequate spacing must be allowed for access to the cooling tower. Refer to EVAPCO's Equipment Layout Manual.

✧ Outlet connection extends beyond bottom flange.
† Height includes fan guard which ships factory mounted.
✦ Heaviest section is upper section.
* Additional weight and dimensions for optional SLSF.

Models: AT 220-2I18 to 220-5N18T

Two-Cell Cooling Towers

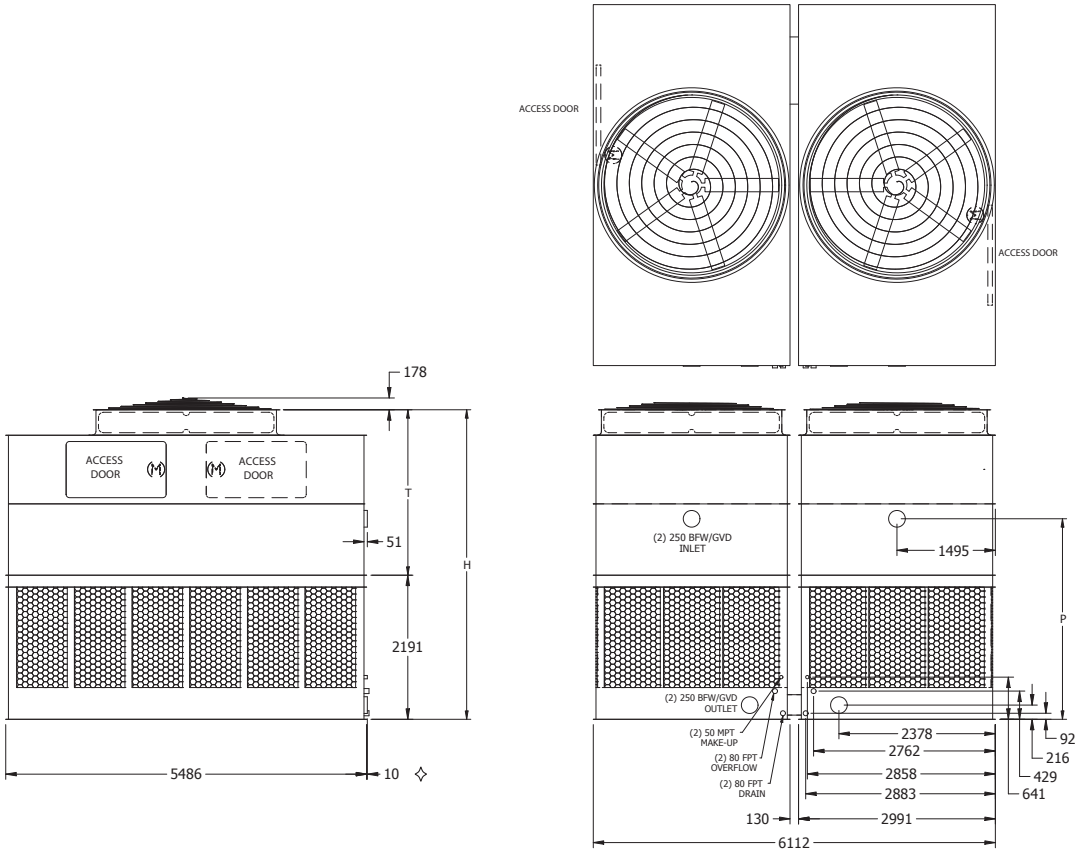

Model No.	Weights (kg)			Fan Motor (kW)	Air Flow (m^3/s)	Dimensions (mm)		
	Shipping	Operating	Heaviest Section✦			H†	T†	P
AT 220-2I18	8,665	15,560	2,560	(2) 7.5	80.8	4,705	2,515	3,048
AT 220-2J18	8,725	15,620	2,590	(2) 11	91.9	4,705	2,515	3,048
AT 220-2K18	8,770	15,665	2,615	(2) 15	100.7	4,705	2,515	3,048
AT 220-2L18	9,860	16,755	2,635	(2) 18.5	108.1	4,705	2,515	3,048
AT 220-2M18	9,925	16,820	2,680	(2) 22	114.6	4,705	2,515	3,048
AT 220-3I18	9,290	16,185	2,870	(2) 7.5	79.6	5,010	2,819	3,353
AT 220-3J18	9,355	16,250	2,905	(2) 11	90.5	5,010	2,819	3,353
AT 220-3K18	9,400	16,295	2,925	(2) 15	99.1	5,010	2,819	3,353
AT 220-3L18	8,820	15,710	2,950	(2) 18.5	106.2	5,010	2,819	3,353
AT 220-3M18	8,910	15,805	2,995	(2) 22	112.5	5,010	2,819	3,353
AT 220-3N18	9,445	16,340	3,105	(2) 30	123.1	5,010	2,819	3,353
AT 220-4I18	9,535	16,430	3,155	(2) 7.5	78.2	5,315	3,124	3,658
AT 220-4J18	9,970	16,865	3,190	(2) 11	89.0	5,315	3,124	3,658
AT 220-4K18	10,015	16,910	3,210	(2) 15	97.5	5,315	3,124	3,658
AT 220-4L18	10,105	17,000	3,235	(2) 18.5	104.6	5,315	3,124	3,658
AT 220-4M18	9,760	16,655	3,280	(2) 22	110.8	5,315	3,124	3,658
AT 220-4N18	10,335	17,225	3,395	(2) 30	121.2	5,315	3,124	3,658
AT 220-4I18T	10,035	16,930	3,155	(2) 7.5	79.71	5,772	3,124	4,115
AT 220-4J18T	10,095	16,990	3,190	(2) 11	90.66	5,772	3,124	4,115
AT 220-4K18T	10,140	17,035	3,210	(2) 15	99.34	5,772	3,124	4,115
AT 220-4L18T	10,190	17,080	3,235	(2) 18.5	106.57	5,772	3,124	4,115
AT 220-4M18T	10,280	17,175	3,280	(2) 22	112.89	5,772	3,124	4,115
AT 220-4N18T	10,505	17,400	3,395	(2) 30	123.51	5,772	3,124	4,115
AT 220-5I18T	10,620	17,515	3,450	(2) 7.5	78.48	6,077	3,429	4,420
AT 220-5J18T	10,680	17,575	3,480	(2) 11	89.25	6,077	3,429	4,420
AT 220-5K18T	10,725	17,620	3,505	(2) 15	97.74	6,077	3,429	4,420
AT 220-5L18T	10,775	17,665	3,525	(2) 18.5	104.87	6,077	3,429	4,420
AT 220-5M18T	10,865	17,760	3,570	(2) 22	111.05	6,077	3,429	4,420
AT 220-5N18T	11,090	17,985	3,685	(2) 30	121.53	6,077	3,429	4,420
SLSF Addition*	635	635	318			546	546	

NOTE: (1) An adequately sized bleed line must be installed in the cooling tower system to prevent build-up of impurities in the recirculated water.
(2) Do not use catalog drawings for certified prints. Dimensions and weights are subject to change.
(3) Adequate spacing must be allowed for access to the cooling tower. Refer to EVAPCO's Equipment Layout Manual.

✧ Outlet connection extends beyond bottom flange.
† Height includes fan guard which ships factory mounted.
✦ Heaviest section is upper section.
* Additional weight and dimensions for optional SLSF.

Models: AT 224-2J18F to 224-5P18FT

Two-Cell Cooling Towers

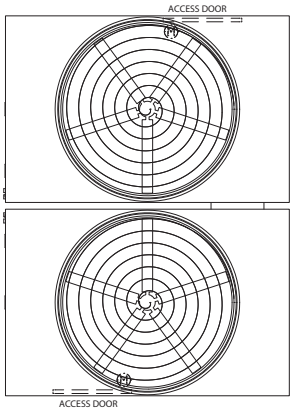

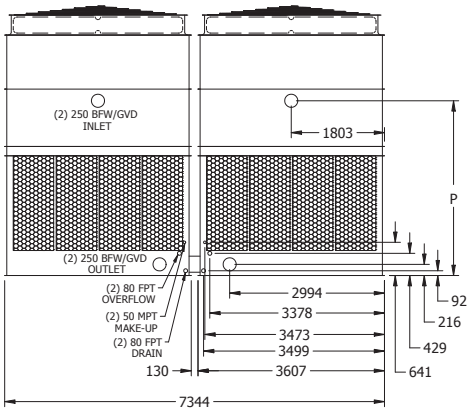

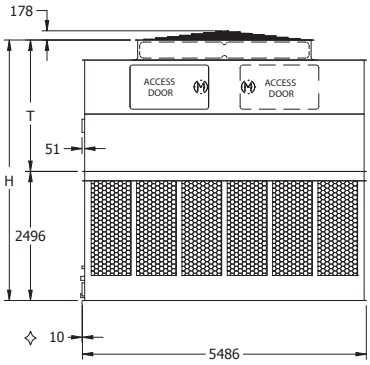

Model No.	Weights (kg)			Fan Motor (kW)	Air Flow (m^3/s)	Dimensions (mm)		
	Shipping	Operating	Heaviest Section✦			H†	T†	P
AT 224-2J18F	10,050	18,460	3,040	(2) 11	103.5	5,036	2,540	3,378
AT 224-2K18F	10,105	18,515	3,065	(2) 15	113.4	5,036	2,540	3,378
AT 224-2L18F	10,150	18,560	3,090	(2) 18.5	121.9	5,036	2,540	3,378
AT 224-2M18F	10,250	18,660	3,140	(2) 22	129.2	5,036	2,540	3,378
AT 224-2N18F	10,485	18,895	3,255	(2) 30	141.5	5,036	2,540	3,378
AT 224-3J18F	10,760	19,170	3,395	(2) 11	102.0	5,340	2,845	3,683
AT 224-3K18F	10,815	19,225	3,420	(2) 15	111.6	5,340	2,845	3,683
AT 224-3L18F	10,860	19,270	3,445	(2) 18.5	119.8	5,340	2,845	3,683
AT 224-3M18F	10,960	19,370	3,495	(2) 22	126.9	5,340	2,845	3,683
AT 224-3N18F	11,195	19,605	3,610	(2) 30	138.8	5,340	2,845	3,683
AT 224-3O18F	11,250	19,660	3,640	(2) 37	149.0	5,340	2,845	3,683
AT 224-4J18F	11,430	19,840	3,730	(2) 11	100.3	5,645	3,150	3,988
AT 224-4K18F	11,485	19,895	3,755	(2) 15	109.8	5,645	3,150	3,988
AT 224-4L18F	11,530	19,940	3,780	(2) 18.5	117.9	5,645	3,150	3,988
AT 224-4M18F	11,630	20,040	3,830	(2) 22	124.8	5,645	3,150	3,988
AT 224-4N18F	11,865	20,275	3,945	(2) 30	136.5	5,645	3,150	3,988
AT 224-4O18F	11,920	20,330	3,975	(2) 37	146.3	5,645	3,150	3,988
AT 224-4P18F	12,020	20,430	4,025	(2) 45	155.0	5,645	3,150	3,988
AT 224-4J18FT	11,625	20,035	3,730	(2) 11	102.37	6,102	3,150	4,445
AT 224-4K18FT	11,680	20,090	3,755	(2) 15	112.13	6,102	3,150	4,445
AT 224-4L18FT	11,725	20,135	3,780	(2) 18.5	120.39	6,102	3,150	4,445
AT 224-4M18FT	11,825	20,235	3,830	(2) 22	127.47	6,102	3,150	4,445
AT 224-4N18FT	12,060	20,470	3,945	(2) 30	139.46	6,102	3,150	4,445
AT 224-4O18FT	12,115	20,525	3,975	(2) 37	149.47	6,102	3,150	4,445
AT 224-4P18FT	12,215	20,625	4,025	(2) 45	158.39	6,102	3,150	4,445
AT 224-5J18FT	12,310	20,720	4,070	(2) 11	100.76	6,407	3,454	4,750
AT 224-5K18FT	12,365	20,775	4,100	(2) 15	110.34	6,407	3,454	4,750
AT 224-5L18FT	12,410	20,820	4,120	(2) 18.5	118.46	6,407	3,454	4,750
AT 224-5M18FT	12,510	20,920	4,170	(2) 22	125.44	6,407	3,454	4,750
AT 224-5N18FT	12,745	21,155	4,290	(2) 30	137.20	6,407	3,454	4,750
AT 224-5O18FT	12,800	21,210	4,315	(2) 37	147.01	6,407	3,454	4,750
AT 224-5P18FT	12,900	21,310	4,365	(2) 45	155.79	6,407	3,454	4,750
SLSF Addition*	1.089	1.089	544			394	394	

NOTE:
(1) An adequately sized bleed line must be installed in the cooling tower system to prevent build-up of impurities in the recirculated water.
(2) Do not use catalog drawings for certified prints. Dimensions and weights are subject to change.
(3) Adequate spacing must be allowed for access to the cooling tower. Refer to EVAPCO's Equipment Layout Manual.
(4) Optional Dual Fan units will have a "-DF" at the end of the model number in Spectrum. Fan kW and weights may vary.

✧ Outlet connection extends beyond bottom flange.
† Height includes fan guard which ships factory mounted.
✦ Heaviest section is upper section.
* Additional weight and dimensions for optional SLSF.

Models: AT 224-2K20 to 224-5P20T

Two-Cell Cooling Towers

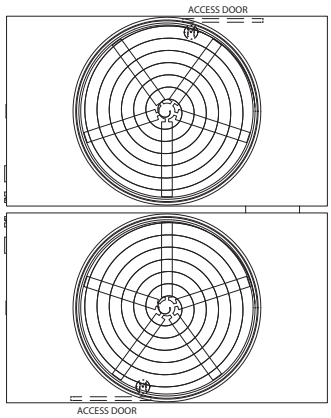

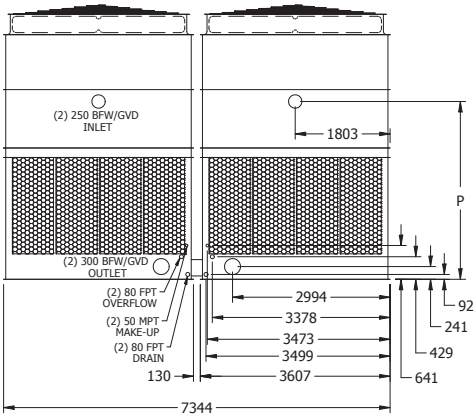

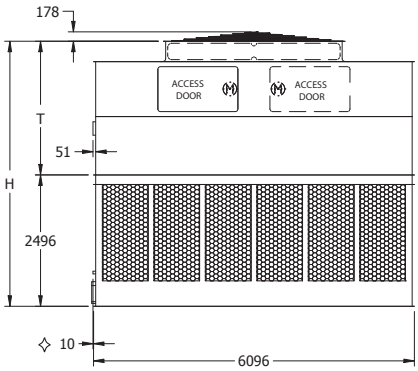

Model No.	Weights (kg)			Fan Motor (kW)	Air Flow (m^3/s)	Dimensions (mm)		
	Shipping	Operating	Heaviest Section✦			H†	T†	P
AT 224-2K20	10,730	20,165	3,270	(2) 15	115.3	5,036	2,540	3,378
AT 224-2L20	10,775	20,210	3,295	(2) 18.5	123.7	5,036	2,540	3,378
AT 224-2M20	10,875	20,310	3,345	(2) 22	131.2	5,036	2,540	3,378
AT 224-2N20	11,115	20,550	3,460	(2) 30	143.5	5,036	2,540	3,378
AT 224-2O20	11,165	20,600	3,490	(2) 37	153.9	5,036	2,540	3,378
AT 224-3K20	11,395	20,830	3,600	(2) 15	113.4	5,340	2,845	3,683
AT 224-3L20	11,440	20,875	3,625	(2) 18.5	121.7	5,340	2,845	3,683
AT 224-3M20	11,540	20,975	3,675	(2) 22	128.8	5,340	2,845	3,683
AT 224-3N20	11,775	21,210	3,790	(2) 30	140.8	5,340	2,845	3,683
AT 224-3O20	11,830	21,265	3,820	(2) 37	150.9	5,340	2,845	3,683
AT 224-4K20	12,210	21,645	4,010	(2) 15	111.5	5,645	3,150	3,988
AT 224-4L20	12,255	21,690	4,030	(2) 18.5	119.6	5,645	3,150	3,988
AT 224-4M20	12,355	21,790	4,080	(2) 22	126.7	5,645	3,150	3,988
AT 224-4N20	12,590	22,025	4,200	(2) 30	138.6	5,645	3,150	3,988
AT 224-4O20	12,645	22,080	4,225	(2) 37	148.5	5,645	3,150	3,988
AT 224-4P20	12,745	22,180	4,275	(2) 45	157.4	5,645	3,150	3,988
AT 224-4K20T	12,960	22,395	4,010	(2) 15	113.79	6,102	3,150	4,445
AT 224-4L20T	13,005	22,440	4,030	(2) 18.5	122.14	6,102	3,150	4,445
AT 224-4M20T	13,105	22,540	4,080	(2) 22	129.36	6,102	3,150	4,445
AT 224-4N20T	13,340	22,775	4,200	(2) 30	141.54	6,102	3,150	4,445
AT 224-4O20T	13,395	22,830	4,225	(2) 37	151.68	6,102	3,150	4,445
AT 224-4P20T	13,495	22,930	4,275	(2) 45	160.75	6,102	3,150	4,445
AT 224-5K20T	13,710	23,140	4,385	(2) 15	112.04	6,407	3,454	4,750
AT 224-5L20T	13,755	23,190	4,405	(2) 18.5	120.21	6,407	3,454	4,750
AT 224-5M20T	13,855	23,285	4,455	(2) 22	127.33	6,407	3,454	4,750
AT 224-5N20T	14,090	23,525	4,575	(2) 30	139.27	6,407	3,454	4,750
AT 224-5O20T	14,145	23,580	4,600	(2) 37	149.23	6,407	3,454	4,750
AT 224-5P20T	14,245	23,680	4,650	(2) 45	158.15	6,407	3,454	4,750
SLSF Addition*	1,089	1,089	544			394	394	

NOTE: (1) An adequately sized bleed line must be installed in the cooling tower system to prevent build-up of impurities in the recirculated water.
(2) Do not use catalog drawings for certified prints. Dimensions and weights are subject to change.
(3) Adequate spacing must be allowed for access to the cooling tower. Refer to EVAPCO's Equipment Layout Manual.

✧ Outlet connection extends beyond bottom flange.
† Height includes fan guard which ships factory mounted.
✦ Heaviest section is upper section.
* Additional weight and dimensions for optional SLSF.

Models: AT 228-2K18 to 228-4Q18

Two-Cell Cooling Towers

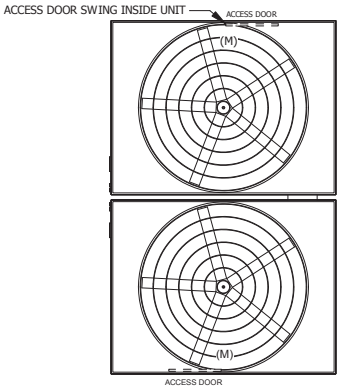

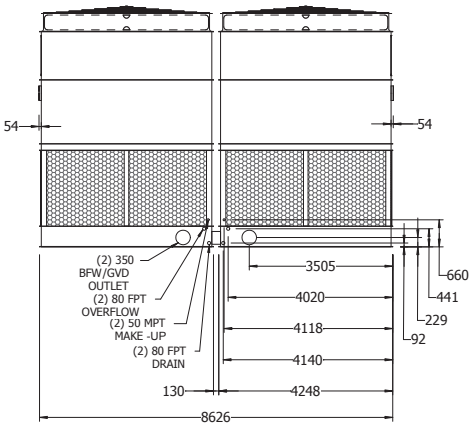

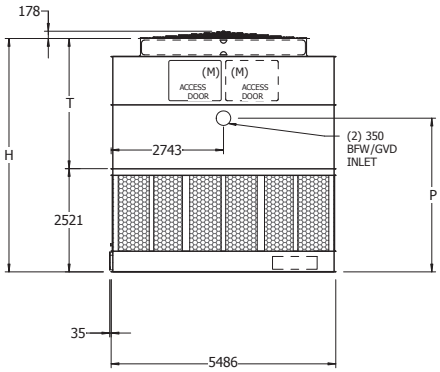

Model No.	Weights (kg)			Fan Motor (kW)	Air Flow (m^3/s)	Dimensions (mm)		
	Shipping	Operating	Heaviest Section✦			H†	T†	P
AT 228-2K18	14,005	22,815	4,705	(2) 15	122.2	5,394	2,870	3,448
AT 228-2L18	14,050	22,860	4,725	(2) 18.5	131.2	5,394	2,870	3,448
AT 228-2M18	14,070	22,880	4,735	(2) 22	139.2	5,394	2,870	3,448
AT 228-2N18	14,205	23,015	4,805	(2) 30	152.6	5,394	2,870	3,448
AT 228-2O18	14,525	23,335	4,960	(2) 37	163.9	5,394	2,870	3,448
AT 228-3K18	14,880	23,685	5,140	(2) 15	120.2	5,699	3,175	3,753
AT 228-3L18	14,925	23,730	5,160	(2) 18.5	129.1	5,699	3,175	3,753
AT 228-3M18	14,940	23,750	5,170	(2) 22	136.8	5,699	3,175	3,753
AT 228-3N18	15,075	23,885	5,240	(2) 30	149.8	5,699	3,175	3,753
AT 228-3O18	15,395	24,205	5,400	(2) 37	160.8	5,699	3,175	3,753
AT 228-3P18	15,550	24,360	5,475	(2) 45	170.3	5,699	3,175	3,753
AT 228-4K18	15,620	24,430	5,510	(2) 15	118.0	6,004	3,480	4,058
AT 228-4L18	15,665	24,475	5,535	(2) 18.5	126.8	6,004	3,480	4,058
AT 228-4M18	15,685	24,495	5,545	(2) 22	134.4	6,004	3,480	4,058
AT 228-4N18	15,820	24,630	5,610	(2) 30	147.3	6,004	3,480	4,058
AT 228-4O18	16,140	24,950	5,770	(2) 37	158.1	6,004	3,480	4,058
AT 228-4P18	16,295	25,100	5,845	(2) 45	167.5	6,004	3,480	4,058
AT 228-4Q18	16,510	25,320	5,955	(2) 55	179.8	6,004	3,480	4,058
SLSF Addition*	1,134	1,134	567			343	343	

NOTE: (1) An adequately sized bleed line must be installed in the cooling tower system to prevent build-up of impurities in the recirculated water.
(2) Do not use catalog drawings for certified prints. Dimensions and weights are subject to change.
(3) Adequate spacing must be allowed for access to the cooling tower. Refer to EVAPCO's Equipment Layout Manual.

✧ Outlet connection extends beyond bottom flange.
† Height includes fan guard which ships factory mounted.
✦ Heaviest section is upper section.
* Additional weight and dimensions for optional SLSF.

Models: AT 228-2K24 to 228-4R24*

Two-Cell Cooling Towers

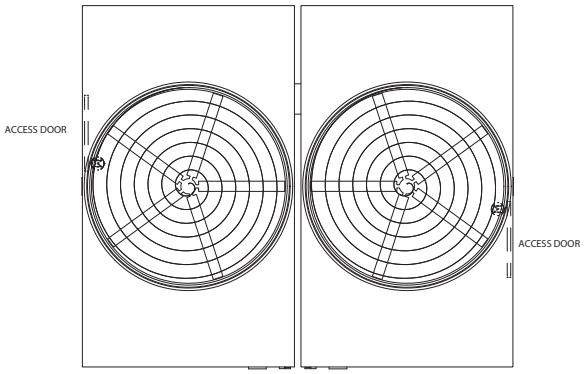

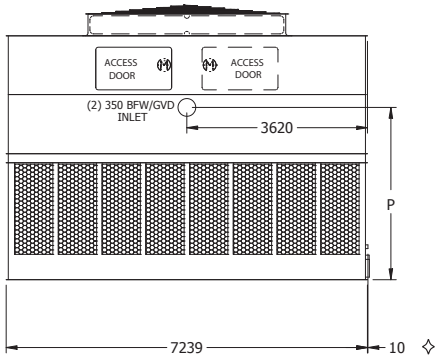

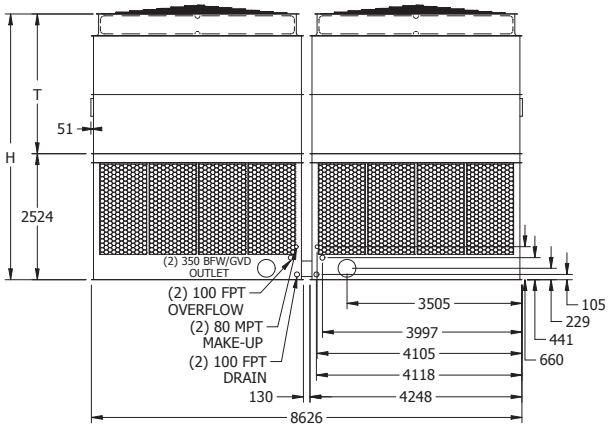

Model No.	Weights (kg)			Fan Motor (kW)	Air Flow (m^3/s)	Dimensions (mm)		
	Shipping	Operating	Heaviest Section✦			H†	T†	P
AT 228-2K24	15,085	29,465	4,810	(2) 15	147.4	5,324	2,800	3,451
AT 228-2L24	15,130	29,510	4,830	(2) 18.5	158.2	5,324	2,800	3,451
AT 228-2M24	15,150	29,530	4,840	(2) 22	167.7	5,324	2,800	3,451
AT 228-2N24	15,285	29,665	4,910	(2) 30	184.0	5,324	2,800	3,451
AT 228-2O24	15,605	29,980	5,065	(2) 37	197.7	5,324	2,800	3,451
AT 228-3K24	16,030	30,410	5,280	(2) 15	145.2	5,629	3,105	3,756
AT 228-3L24	16,075	30,455	5,300	(2) 18.5	155.7	5,629	3,105	3,756
AT 228-3M24	16,095	30,470	5,310	(2) 22	165.1	5,629	3,105	3,756
AT 228-3N24	16,230	30,610	5,380	(2) 30	180.8	5,629	3,105	3,756
AT 228-3O24	16,545	30,925	5,540	(2) 37	194.0	5,629	3,105	3,756
AT 228-3P24	16,700	31,080	5,615	(2) 45	205.3	5,629	3,105	3,756
AT 228-4K24	16,975	31,350	5,750	(2) 15	142.6	5,934	3,410	4,061
AT 228-4L24	17,020	31,400	5,775	(2) 18.5	153.0	5,934	3,410	4,061
AT 228-4M24	17,035	31,415	5,785	(2) 22	162.2	5,934	3,410	4,061
AT 228-4N24	17,175	31,550	5,850	(2) 30	177.7	5,934	3,410	4,061
AT 228-4O24	17,490	31,870	6,010	(2) 37	190.9	5,934	3,410	4,061
AT 228-4P24	17,645	32,025	6,085	(2) 45	202.0	5,934	3,410	4,061
AT 228-4Q24	17,860	32,240	6,195	(2) 55	216.6	5,934	3,410	4,061
AT 228-4R24*	18,260	32,640	6,395	(2) 75	237.3	5,934	3,410	4,061
SLSF Addition**	1,134	1,134	567			343	343	

* Model available with gear drive only. Motors and access doors located on 4,248 mm unit end. Super Low Sound Fan is not available on this unit.

NOTE: (1) An adequately sized bleed line must be installed in the cooling tower system to prevent build-up of impurities in the recirculated water.
(2) Do not use catalog drawings for certified prints. Dimensions and weights are subject to change.
(3) Adequate spacing must be allowed for access to the cooling tower. Refer to EVAPCO's Equipment Layout Manual.

✧ Outlet connection extends beyond bottom flange.
† Height includes fan guard which ships factory mounted.
✦ Heaviest section is upper section.
** Additional weight and dimensions for optional SLSF.

Models: AT 228-5K26 to 228-5O26

Two-Cell Cooling Towers

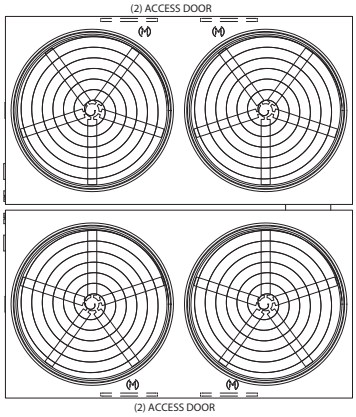

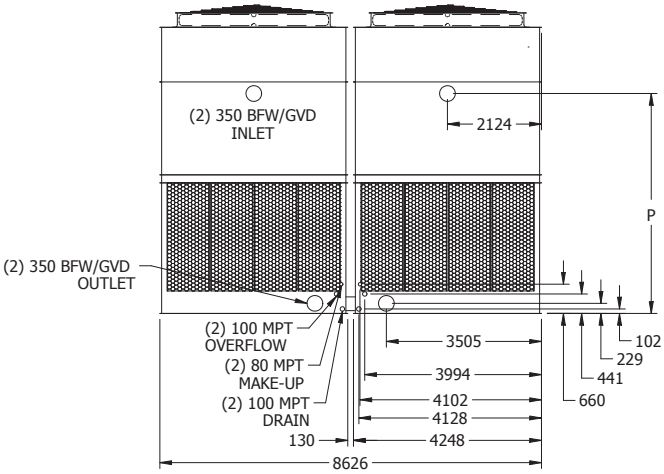

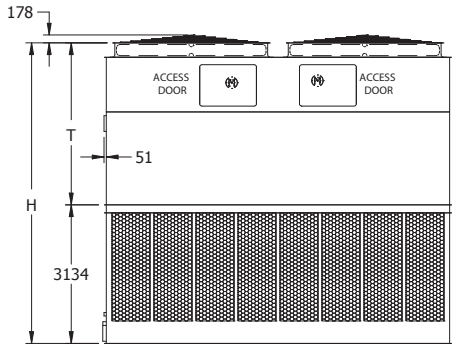

Model No.	Weights (kg)			Fan Motor (kW)	Air Flow (m^3/s)	Dimensions (mm)		
	Shipping	Operating	Heaviest Section✦			H†	T†	P
AT 228-5K26	22,025	37,295	8,010	(4) 15	185.0	6,795	3,661	4,972
AT 228-5L26	22,080	37,350	8,040	(4) 18.5	198.4	6,795	3,661	4,972
AT 228-5M26	22,170	37,440	8,085	(4) 22	210.1	6,795	3,661	4,972
AT 228-5N26	22,460	37,730	8,230	(4) 30	229.7	6,795	3,661	4,972
AT 228-5O26	22,480	37,750	8,235	(4) 37	246.2	6,795	3,661	4,972
SLSF Addition*	✤	2,177	✤			394	394	

NOTE: (1) An adequately sized bleed line must be installed in the cooling tower system to prevent build-up of impurities in the recirculated water.
(2) Do not use catalog drawings for certified prints. Dimensions and weights are subject to change.
(3) Adequate spacing must be allowed for access to the cooling tower. Refer to EVAPCO's Equipment Layout Manual.

✧ Outlet connection extends beyond bottom flange.
† Height includes fan guard which ships factory mounted.
* Additional weight and dimensions for optional SLSF.
✦ Heaviest section is upper section.
✤ Please consult the factory for additional information regarding shipping and section weight changes.

Models: AT 38-2H36 to 38-5L36T

Three-Cell Cooling Towers

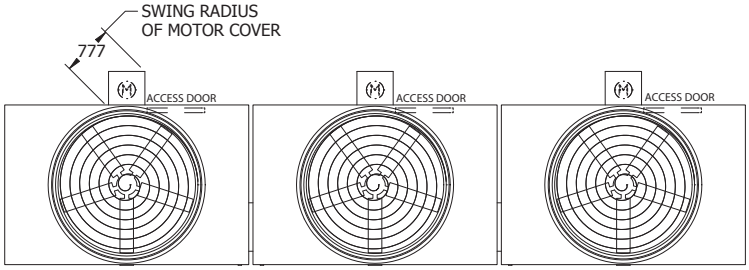

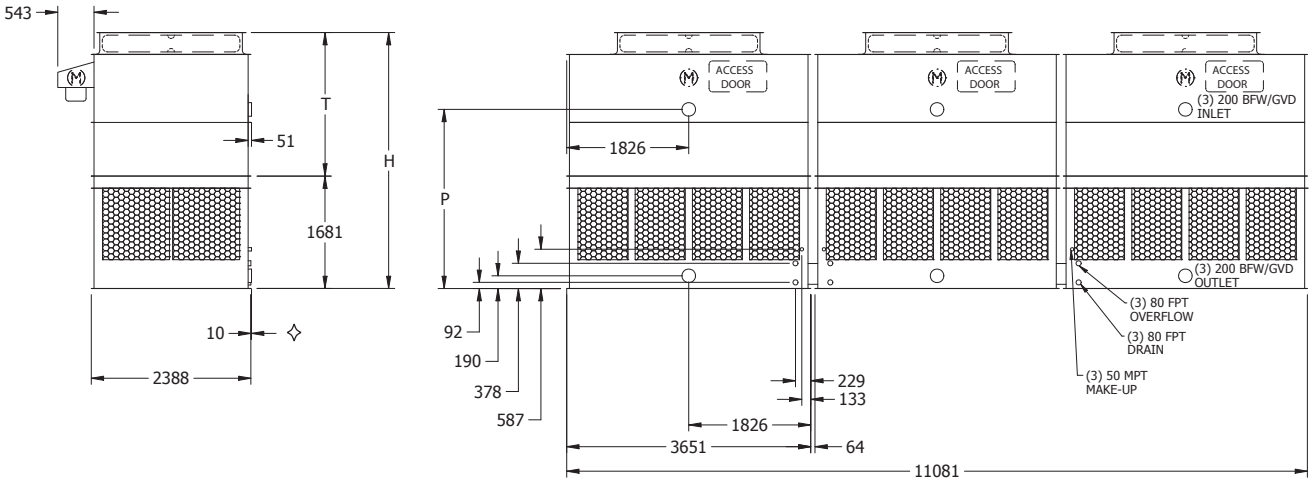

Model No.	Weights (kg)			Fan Motor (kW)	Air Flow (m^3/s)	Dimensions (mm)		
	Shipping	Operating	Heaviest Section✦			H†	T†	P
AT 38-2H36	6,845	11,800	1,440	(3) 5.5	67.4	3,829	2,146	2,680
AT 38-2I36	6,885	11,840	1,455	(3) 7.5	73.8	3,829	2,146	2,680
AT 38-2J36	6,980	11,935	1,490	(3) 11	84.0	3,829	2,146	2,680
AT 38-2K36	7,050	12,000	1,510	(3) 15	92.0	3,829	2,146	2,680
AT 38-3H36	7,295	12,245	1,590	(3) 5.5	66.4	4,134	2,451	2,985
AT 38-3I36	7,335	12,290	1,605	(3) 7.5	72.6	4,134	2,451	2,985
AT 38-3J36	7,430	12,385	1,635	(3) 11	82.4	4,134	2,451	2,985
AT 38-3K36	7,500	12,450	1,660	(3) 15	90.2	4,134	2,451	2,985
AT 38-3L36	7,540	12,490	1,675	(3) 18.5	96.9	4,134	2,451	2,985
AT 38-4H36	7,785	12,735	1,755	(3) 5.5	65.1	4,439	2,756	3,289
AT 38-4I36	7,825	12,780	1,770	(3) 7.5	71.3	4,439	2,756	3,289
AT 38-4J36	7,920	12,875	1,800	(3) 11	81.1	4,439	2,756	3,289
AT 38-4K36	7,990	12,940	1,825	(3) 15	88.7	4,439	2,756	3,289
AT 38-4L36	8,030	12,980	1,835	(3) 18.5	95.2	4,439	2,756	3,289
AT 38-4H36T	7,915	12,865	1,755	(3) 5.5	66.36	4,743	2,756	3,594
AT 38-4I36T	7,955	12,905	1,770	(3) 7.5	72.68	4,743	2,756	3,594
AT 38-4J36T	8,050	13,000	1,800	(3) 11	82.64	4,743	2,756	3,594
AT 38-4K36T	8,115	13,070	1,825	(3) 15	90.43	4,743	2,756	3,594
AT 38-4L36T	8,160	13,110	1,835	(3) 18.5	97.03	4,743	2,756	3,594
AT 38-5H36T	8,430	13,385	1,930	(3) 5.5	65.32	5,048	3,061	3,899
AT 38-5I36T	8,470	13,425	1,940	(3) 7.5	71.50	5,048	3,061	3,899
AT 38-5J36T	8,565	13,520	1,975	(3) 11	81.27	5,048	3,061	3,899
AT 38-5K36T	8,635	13,585	1,995	(3) 15	88.87	5,048	3,061	3,899
AT 38-5L36T	8,675	13,630	2,010	(3) 18.5	95.38	5,048	3,061	3,899
SLSF Addition*	-	-	-			738	738	

NOTE: (1) An adequately sized bleed line must be installed in the cooling tower system to prevent build-up of impurities in the recirculated water.
(2) Do not use catalog drawings for certified prints. Dimensions and weights are subject to change.
(3) Adequate spacing must be allowed for access to the cooling tower. Refer to EVAPCO's Equipment Layout Manual.
(4) For 4 layers additional height is 738 mm and fan coil is removable for transport.

✧ Outlet connection extends beyond bottom flange.
† Height includes fan guard which ships factory mounted.
✦ Heaviest section is upper section.

Models: AT 38-2H42 to 38-5M42T

Three-Cell Cooling Towers

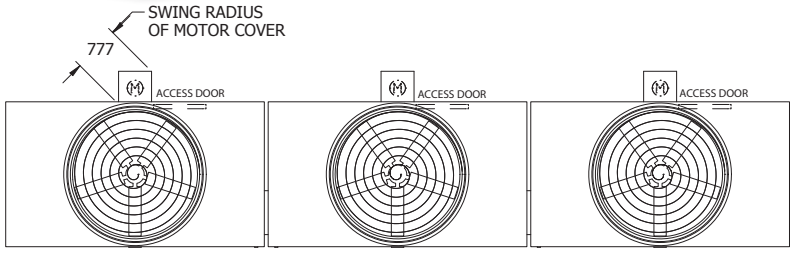

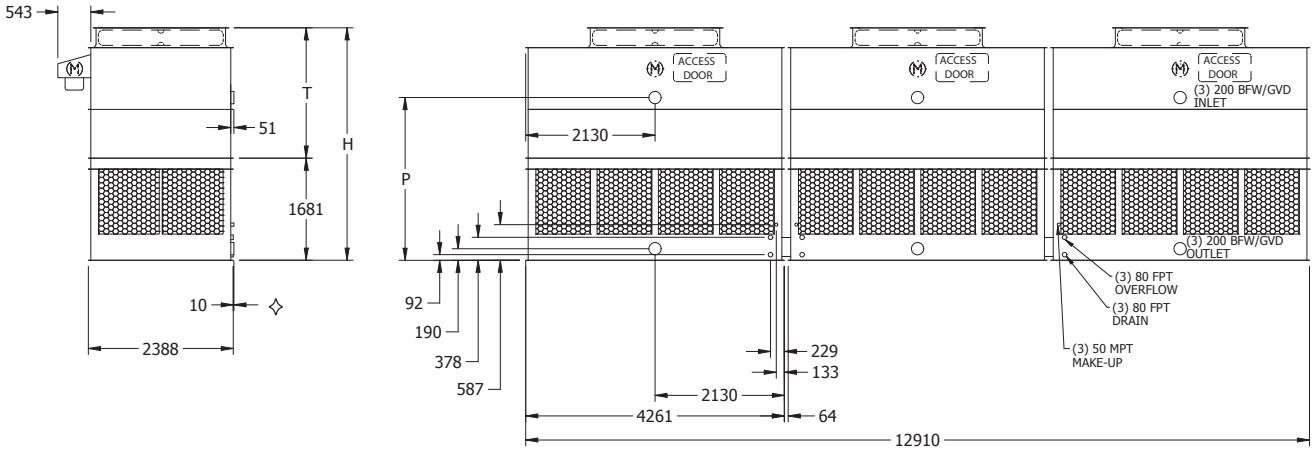

Model No.	Weights (kg)			Fan Motor (kW)	Air Flow (m^3/s)	Dimensions (mm)		
	Shipping	Operating	Heaviest Section✦			H†	T†	P
AT 38-2H42	7,445	13,255	1,545	(3) 5.5	75.2	3,829	2,146	2,680
AT 38-2I42	7,485	13,295	1,560	(3) 7.5	82.4	3,829	2,146	2,680
AT 38-2J42	7,580	13,390	1,590	(3) 11	93.6	3,829	2,146	2,680
AT 38-2K42	7,650	13,460	1,615	(3) 15	102.5	3,829	2,146	2,680
AT 38-2L42	7,690	13,500	1,630	(3) 18.5	110.0	3,829	2,146	2,680
AT 38-3H42	7,960	13,770	1,720	(3) 5.5	73.9	4,134	2,451	2,985
AT 38-3I42	8,000	13,810	1,735	(3) 7.5	80.9	4,134	2,451	2,985
AT 38-3J42	8,095	13,905	1,765	(3) 11	92.0	4,134	2,451	2,985
AT 38-3K42	8,165	13,975	1,785	(3) 15	100.6	4,134	2,451	2,985
AT 38-3L42	8,205	14,015	1,800	(3) 18.5	107.9	4,134	2,451	2,985
AT 38-3M42	8,235	14,045	1,810	(3) 22	114.4	4,134	2,451	2,985
AT 38-4H42	8,520	14,330	1,905	(3) 5.5	72.5	4,439	2,756	3,289
AT 38-4I42	8,560	14,370	1,920	(3) 7.5	79.4	4,439	2,756	3,289
AT 38-4J42	8,655	14,465	1,950	(3) 11	90.4	4,439	2,756	3,289
AT 38-4K42	8,725	14,535	1,975	(3) 15	98.9	4,439	2,756	3,289
AT 38-4L42	8,765	14,575	1,985	(3) 18.5	106.0	4,439	2,756	3,289
AT 38-4M42	8,790	14,600	1,995	(3) 22	112.4	4,439	2,756	3,289
AT 38-4H42T	8,655	14,465	1,905	(3) 5.5	73.91	4,743	2,756	3,594
AT 38-4I42T	8,695	14,505	1,920	(3) 7.5	80.94	4,743	2,756	3,594
AT 38-4J42T	8,790	14,600	1,950	(3) 11	92.12	4,743	2,756	3,594
AT 38-4K42T	8,860	14,670	1,975	(3) 15	100.86	4,743	2,756	3,594
AT 38-4L42T	8,900	14,710	1,985	(3) 18.5	108.12	4,743	2,756	3,594
AT 38-4M42T	8,925	14,735	1,995	(3) 22	114.54	4,743	2,756	3,594
AT 38-5H42T	9,245	15,055	2,100	(3) 5.5	72.77	5,048	3,061	3,899
AT 38-5I42T	9,285	15,100	2,115	(3) 7.5	79.66	5,048	3,061	3,899
AT 38-5J42T	9,385	15,195	2,150	(3) 11	90.66	5,048	3,061	3,899
AT 38-5K42T	9,450	15,260	2,170	(3) 15	99.20	5,048	3,061	3,899
AT 38-5L42T	9,490	15,300	2,185	(3) 18.5	106.33	5,048	3,061	3,899
AT 38-5M42T	9,520	15,330	2,195	(3) 22	112.65	5,048	3,061	3,899
SLSF Addition*	-	-	-			738	738	

NOTE: (1) An adequately sized bleed line must be installed in the cooling tower system to prevent build-up of impurities in the recirculated water.
(2) Do not use catalog drawings for certified prints. Dimensions and weights are subject to change.
(3) Adequate spacing must be allowed for access to the cooling tower. Refer to EVAPCO's Equipment Layout Manual.
(4) For 4 layers additional height is 738 mm and fan coil is removable for transport.

✧ Outlet connection extends beyond bottom flange.
† Height includes fan guard which ships factory mounted.
✦ Heaviest section is upper section.

Models: AT 310-2I36 to 310-5N36T

Three-Cell Cooling Towers

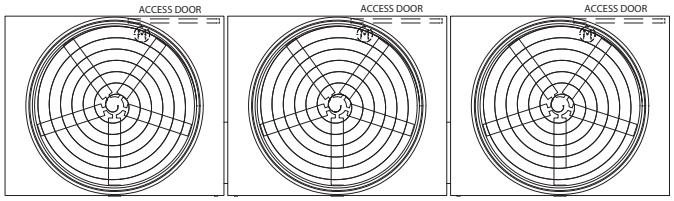

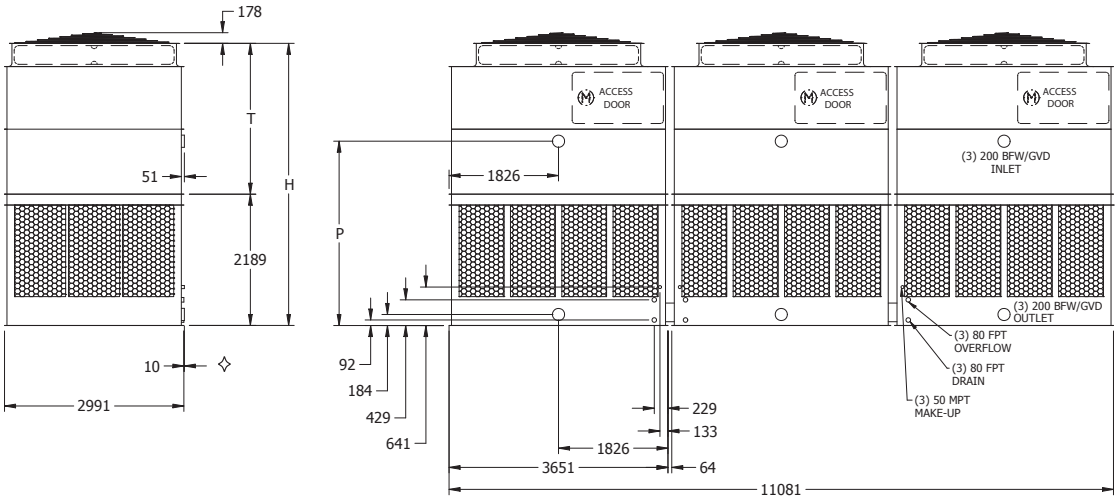

Model No.	Weights (kg)			Fan Motor (kW)	Air Flow (m^3/s)	Dimensions (mm)		
	Shipping	Operating	Heaviest Section✦			H†	T†	P
AT 310-2I36	9,405	16,230	1,905	(3) 7.5	91.7	4,705	2,515	3,073
AT 310-2J36	9,500	16,325	1,935	(3) 11	104.2	4,705	2,515	3,073
AT 310-2K36	9,565	16,395	1,960	(3) 15	114.2	4,705	2,515	3,073
AT 310-2L36	9,635	16,460	1,980	(3) 18.5	122.7	4,705	2,515	3,073
AT 310-2M36	9,770	16,595	2,030	(3) 22	130.0	4,705	2,515	3,073
AT 310-3I36	10,055	16,885	2,125	(3) 7.5	90.2	5,010	2,819	3,378
AT 310-3J36	10,150	16,980	2,155	(3) 11	102.5	5,010	2,819	3,378
AT 310-3K36	10,220	17,045	2,175	(3) 15	112.1	5,010	2,819	3,378
AT 310-3L36	10,285	17,115	2,200	(3) 18.5	120.3	5,010	2,819	3,378
AT 310-3M36	10,425	17,250	2,245	(3) 22	127.5	5,010	2,819	3,378
AT 310-4I36	10,630	17,455	2,315	(3) 7.5	88.8	5,315	3,124	3,683
AT 310-4J36	10,725	17,550	2,345	(3) 11	100.9	5,315	3,124	3,683
AT 310-4K36	10,790	17,620	2,370	(3) 15	110.4	5,315	3,124	3,683
AT 310-4L36	10,860	17,685	2,390	(3) 18.5	118.5	5,315	3,124	3,683
AT 310-4M36	10,995	17,820	2,435	(3) 22	125.4	5,315	3,124	3,683
AT 310-4N36	11,335	18,160	2,550	(3) 26	131.6	5,315	3,124	3,683
AT 310-4I36T	10,830	17,660	2,315	(3) 7.5	90.52	5,772	3,124	4,140
AT 310-4J36T	10,925	17,755	2,345	(3) 11	102.79	5,772	3,124	4,140
AT 310-4K36T	10,995	17,820	2,370	(3) 15	112.56	5,772	3,124	4,140
AT 310-4L36T	11,065	17,890	2,390	(3) 18.5	120.77	5,772	3,124	4,140
AT 310-4M36T	11,200	18,025	2,435	(3) 22	127.85	5,772	3,124	4,140
AT 310-4N36T	11,540	18,365	2,550	(3) 26	134.17	5,772	3,124	4,140
AT 310-5I36T	11,450	18,280	2,520	(3) 7.5	89.06	6,077	3,429	4,445
AT 310-5J36T	11,545	18,375	2,550	(3) 11	101.14	6,077	3,429	4,445
AT 310-5K36T	11,615	18,440	2,575	(3) 15	110.72	6,077	3,429	4,445
AT 310-5L36T	11,680	18,510	2,595	(3) 18.5	118.74	6,077	3,429	4,445
AT 310-5M36T	11,820	18,645	2,640	(3) 22	125.73	6,077	3,429	4,445
AT 310-5N36T	12,160	18,985	2,755	(3) 26	131.91	6,077	3,429	4,445
SLSF Addition*	953	953	318			546	546	

NOTE: (1) An adequately sized bleed line must be installed in the cooling tower system to prevent build-up of impurities in the recirculated water.
(2) Do not use catalog drawings for certified prints. Dimensions and weights are subject to change.
(3) Adequate spacing must be allowed for access to the cooling tower. Refer to EVAPCO's Equipment Layout Manual.

✧ Outlet connection extends beyond bottom flange.
† Height includes fan guard which ships factory mounted.
✦ Heaviest section is upper section.
* Additional weight and dimensions for optional SLSF.

Models: AT 312-2I36F to 312-5N36FT

Three-Cell Cooling Towers

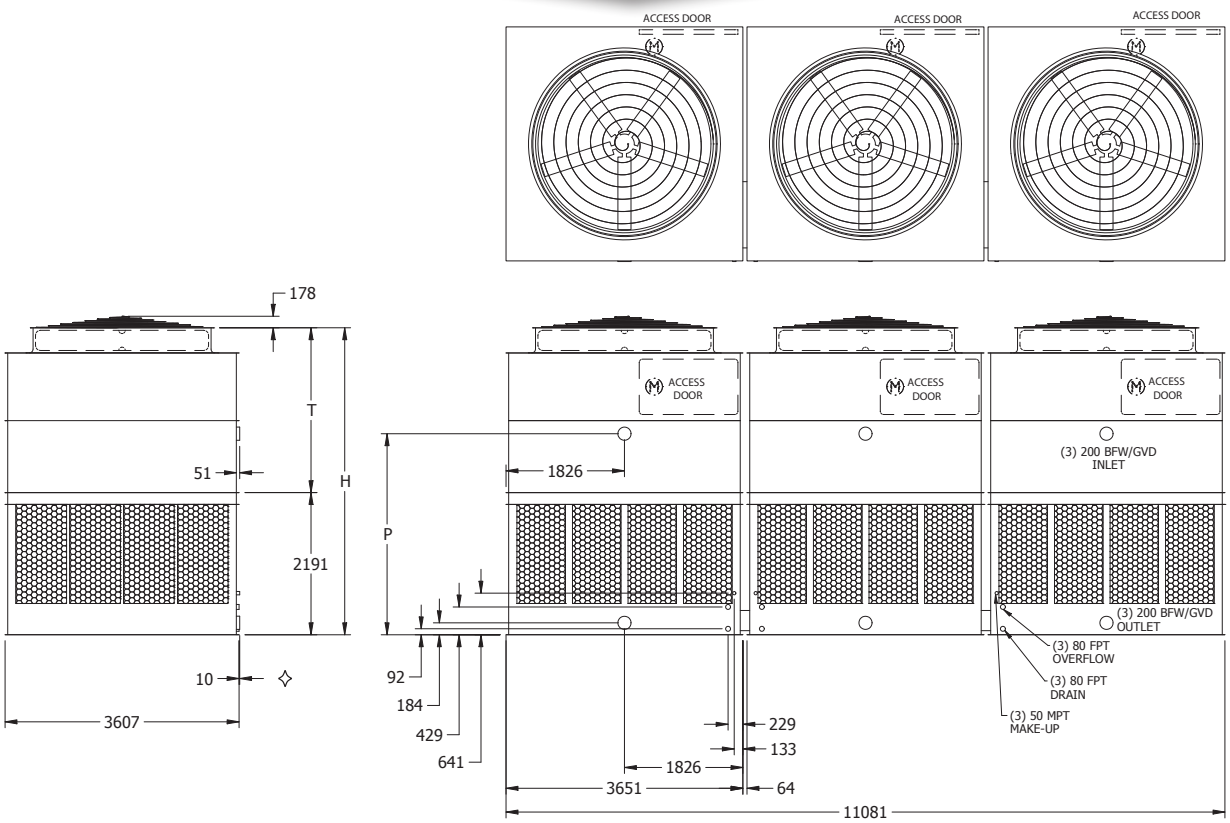

Model No.	Weights (kg)			Fan Motor (kW)	Air Flow (m^3/s)	Dimensions (mm)		
	Shipping	Operating	Heaviest Section✦			H†	T†	P
AT 312-2I36F	10,355	18,805	2,235	(3) 7.5	102.3	4,731	2,540	3,099
AT 312-2J36F	10,450	18,900	2,270	(3) 11	116.3	4,731	2,540	3,099
AT 312-2K36F	10,520	18,970	2,290	(3) 15	127.5	4,731	2,540	3,099
AT 312-2L36F	10,585	19,035	2,315	(3) 18.5	136.9	4,731	2,540	3,099
AT 312-2M36F	10,725	19,175	2,360	(3) 22	145.0	4,731	2,540	3,099
AT 312-3I36F	11,090	19,540	2,480	(3) 7.5	100.8	5,036	2,845	3,404
AT 312-3J36F	11,185	19,635	2,515	(3) 11	114.4	5,036	2,845	3,404
AT 312-3K36F	11,255	19,705	2,535	(3) 15	125.2	5,036	2,845	3,404
AT 312-3L36F	11,320	19,770	2,560	(3) 18.5	134.3	5,036	2,845	3,404
AT 312-3M36F	11,460	19,910	2,605	(3) 22	142.2	5,036	2,845	3,404
AT 312-4I36F	11,755	20,210	2,705	(3) 7.5	99.1	5,340	3,150	3,708
AT 312-4J36F	11,850	20,305	2,735	(3) 11	112.6	5,340	3,150	3,708
AT 312-4K36F	11,920	20,370	2,760	(3) 15	123.2	5,340	3,150	3,708
AT 312-4L36F	11,990	20,440	2,780	(3) 18.5	132.1	5,340	3,150	3,708
AT 312-4M36F	12,125	20,575	2,825	(3) 22	139.8	5,340	3,150	3,708
AT 312-4N36F	12,465	20,915	2,940	(3) 30	153.0	5,340	3,150	3,708
AT 312-4I36FT	11,980	20,430	2,705	(3) 7.5	100.95	5,798	3,150	4,166
AT 312-4J36FT	12,075	20,525	2,735	(3) 11	114.73	5,798	3,150	4,166
AT 312-4K36FT	12,145	20,595	2,760	(3) 15	125.63	5,798	3,150	4,166
AT 312-4L36FT	12,215	20,665	2,780	(3) 18.5	134.65	5,798	3,150	4,166
AT 312-4M36FT	12,350	20,800	2,825	(3) 22	142.48	5,798	3,150	4,166
AT 312-4N36FT	12,690	21,140	2,940	(3) 30	155.98	5,798	3,150	4,166
AT 312-5I36FT	12,705	21,155	2,945	(3) 7.5	99.34	6,102	3,454	4,470
AT 312-5J36FT	12,800	21,250	2,975	(3) 11	112.84	6,102	3,454	4,470
AT 312-5K36FT	12,865	21,315	3,000	(3) 15	123.56	6,102	3,454	4,470
AT 312-5L36FT	12,935	21,385	3,020	(3) 18.5	132.38	6,102	3,454	4,470
AT 312-5M36FT	13,070	21,520	3,065	(3) 22	140.07	6,102	3,454	4,470
AT 312-5N36FT	13,410	21,860	3,180	(3) 30	153.34	6,102	3,454	4,470
SLSF Addition*	953	953	318			546	546	

NOTE: (1) An adequately sized bleed line must be installed in the cooling tower system to prevent build-up of impurities in the recirculated water.
(2) Do not use catalog drawings for certified prints. Dimensions and weights are subject to change.
(3) Adequate spacing must be allowed for access to the cooling tower. Refer to EVAPCO's Equipment Layout Manual.

✧ Outlet connection extends beyond bottom flange.
† Height includes fan guard which ships factory mounted.
✦ Heaviest section is upper section.
* Additional weight and dimensions for optional SLSF.

Models: AT 312-2I42 to 312-5N42T

Three-Cell Cooling Towers

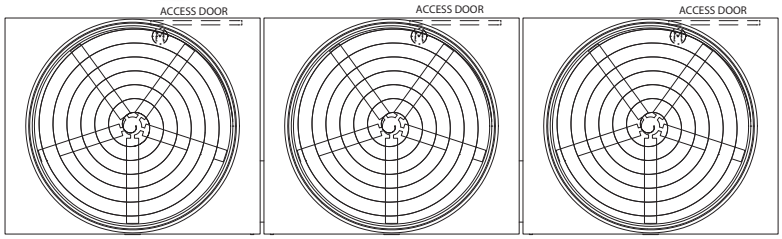

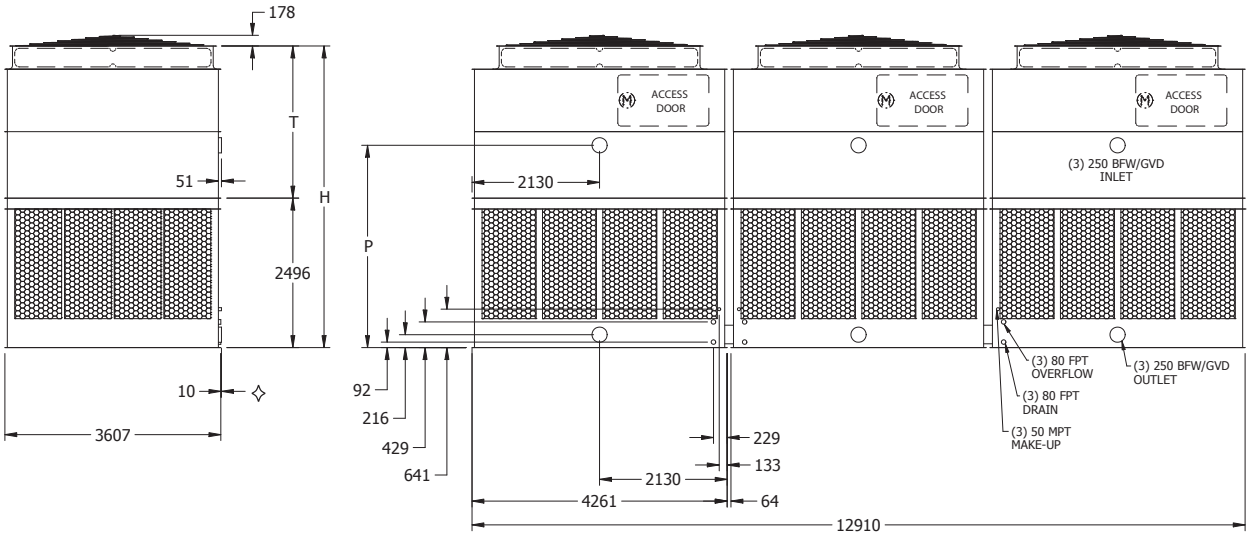

Model No.	Weights (kg)			Fan Motor (kW)	Air Flow (m^3/s)	Dimensions (mm)		
	Shipping	Operating	Heaviest Section✦			H†	T†	P
AT 312-2I42	11,595	21,570	2,430	(3) 7.5	111.1	5,036	2,540	3,378
AT 312-2J42	11,690	21,665	2,465	(3) 11	126.4	5,036	2,540	3,378
AT 312-2K42	11,770	21,745	2,490	(3) 15	138.6	5,036	2,540	3,378
AT 312-2L42	11,850	21,825	2,515	(3) 18.5	148.8	5,036	2,540	3,378
AT 312-2M42	11,950	21,920	2,550	(3) 22	157.6	5,036	2,540	3,378
AT 312-3I42	12,490	22,465	2,730	(3) 7.5	109.4	5,340	2,845	3,683
AT 312-3J42	12,585	22,560	2,760	(3) 11	124.3	5,340	2,845	3,683
AT 312-3K42	12,670	22,645	2,790	(3) 15	136.2	5,340	2,845	3,683
AT 312-3L42	12,750	22,725	2,815	(3) 18.5	146.1	5,340	2,845	3,683
AT 312-3M42	12,845	22,820	2,850	(3) 22	154.6	5,340	2,845	3,683
AT 312-3N42	13,200	23,175	2,965	(3) 30	169.4	5,340	2,845	3,683
AT 312-4I42	13,200	23,175	2,965	(3) 7.5	107.6	5,645	3,150	3,988
AT 312-4J42	13,295	23,270	3,000	(3) 11	122.3	5,645	3,150	3,988
AT 312-4K42	13,375	23,350	3,025	(3) 15	134.0	5,645	3,150	3,988
AT 312-4L42	13,460	23,435	3,055	(3) 18.5	143.8	5,645	3,150	3,988
AT 312-4M42	13,555	23,530	3,085	(3) 22	152.2	5,645	3,150	3,988
AT 312-4N42	13,905	23,880	3,200	(3) 30	166.4	5,645	3,150	3,988
AT 312-4I42T	13,430	23,405	2,965	(3) 7.5	109.63	6,102	3,150	4,445
AT 312-4J42T	13,525	23,500	3,000	(3) 11	124.64	6,102	3,150	4,445
AT 312-4K42T	13,610	23,580	3,025	(3) 15	136.58	6,102	3,150	4,445
AT 312-4L42T	13,690	23,665	3,055	(3) 18.5	146.49	6,102	3,150	4,445
AT 312-4M42T	13,785	23,760	3,085	(3) 22	155.08	6,102	3,150	4,445
AT 312-4N42T	14,140	24,115	3,200	(3) 30	169.57	6,102	3,150	4,445
AT 312-5I42T	14,255	24,230	3,240	(3) 7.5	107.93	6,407	3,454	4,750
AT 312-5J42T	14,350	24,325	3,275	(3) 11	122.66	6,407	3,454	4,750
AT 312-5K42T	14,430	24,405	3,300	(3) 15	134.41	6,407	3,454	4,750
AT 312-5L42T	14,515	24,485	3,325	(3) 18.5	144.13	6,407	3,454	4,750
AT 312-5M42T	14,610	24,580	3,360	(3) 22	152.53	6,407	3,454	4,750
AT 312-5N42T	14,960	24,935	3,475	(3) 30	166.79	6,407	3,454	4,750
SLSF Addition*	953	953	318			546	546	

NOTE: (1) An adequately sized bleed line must be installed in the cooling tower system to prevent build-up of impurities in the recirculated water.
(2) Do not use catalog drawings for certified prints. Dimensions and weights are subject to change.
(3) Adequate spacing must be allowed for access to the cooling tower. Refer to EVAPCO's Equipment Layout Manual.

✧ Outlet connection extends beyond bottom flange.
† Height includes fan guard which ships factory mounted.
✦ Heaviest section is upper section.
* Additional weight and dimensions for optional SLSF.

Models: AT 312-2J54F to 312-5P54FT

Three-Cell Cooling Towers

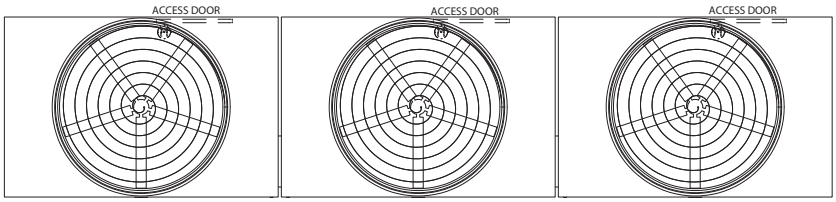

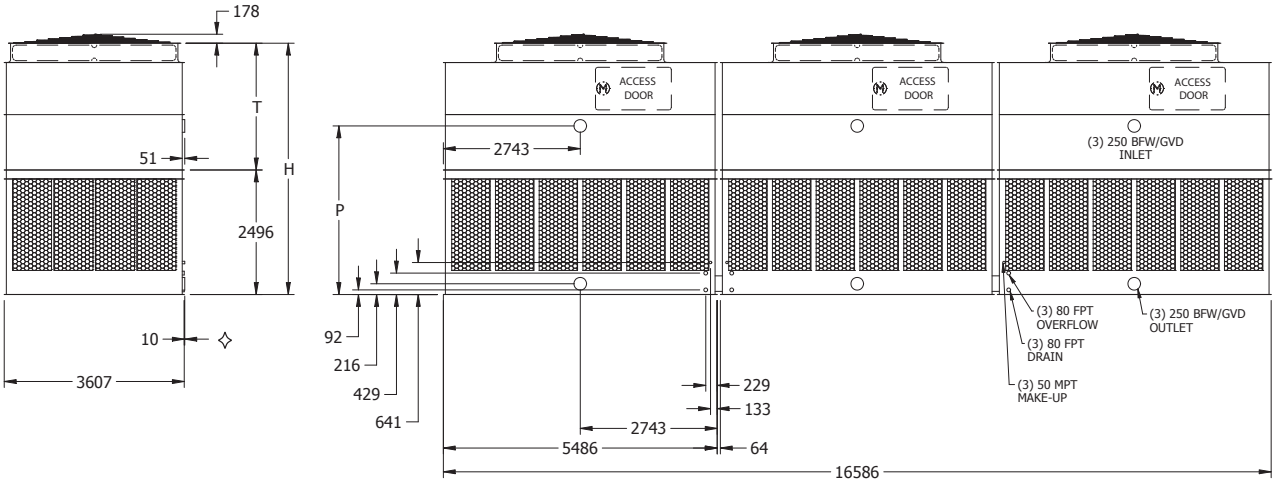

Model No.	Weights (kg)			Fan Motor (kW)	Air Flow (m^3/s)	Dimensions (mm)		
	Shipping	Operating	Heaviest Section✦			H†	T†	P
AT 312-2J54F	14,805	27,420	3,040	(3) 11	156.0	5,036	2,540	3,378
AT 312-2K54F	14,885	27,500	3,065	(3) 15	170.8	5,036	2,540	3,378
AT 312-2L54F	14,955	27,570	3,090	(3) 18.5	183.6	5,036	2,540	3,378
AT 312-2M54F	15,105	27,720	3,140	(3) 22	194.6	5,036	2,540	3,378
AT 312-2N54F	15,460	28,075	3,255	(3) 30	213.2	5,036	2,540	3,378
AT 312-3J54F	15,865	28,480	3,395	(3) 11	153.7	5,340	2,845	3,683
AT 312-3K54F	15,950	28,565	3,420	(3) 15	168.1	5,340	2,845	3,683
AT 312-3L54F	16,015	28,630	3,445	(3) 18.5	180.4	5,340	2,845	3,683
AT 312-3M54F	16,165	28,780	3,495	(3) 22	191.1	5,340	2,845	3,683
AT 312-3N54F	16,520	29,135	3,610	(3) 30	209.1	5,340	2,845	3,683
AT 312-3O54F	16,600	29,215	3,640	(3) 37	224.5	5,340	2,845	3,683
AT 312-4J54F	16,875	29,490	3,730	(3) 11	151.1	5,645	3,150	3,988
AT 312-4K54F	16,955	29,570	3,755	(3) 15	165.4	5,645	3,150	3,988
AT 312-4L54F	17,025	29,640	3,780	(3) 18.5	177.6	5,645	3,150	3,988
AT 312-4M54F	17,175	29,785	3,830	(3) 22	188.1	5,645	3,150	3,988
AT 312-4N54F	17,525	30,140	3,945	(3) 30	205.7	5,645	3,150	3,988
AT 312-4O54F	17,610	30,225	3,975	(3) 37	220.4	5,645	3,150	3,988
AT 312-4P54F	17,760	30,375	4,025	(3) 45	233.5	5,645	3,150	3,988
AT 312-4J54FT	17,175	29,785	3,730	(3) 11	154.23	6,102	3,150	4,445
AT 312-4K54FT	17,255	29,870	3,755	(3) 15	168.91	6,102	3,150	4,445
AT 312-4L54FT	17,325	29,935	3,780	(3) 18.5	181.37	6,102	3,150	4,445
AT 312-4M54FT	17,470	30,085	3,830	(3) 22	192.08	6,102	3,150	4,445
AT 312-4N54FT	17,825	30,440	3,945	(3) 30	210.11	6,102	3,150	4,445
AT 312-4O54FT	17,910	30,520	3,975	(3) 37	225.17	6,102	3,150	4,445
AT 312-4P54FT	18,060	30,670	4,025	(3) 45	238.57	6,102	3,150	4,445
AT 312-5J54FT	18,195	30,810	4,070	(3) 11	151.83	6,407	3,454	4,750
AT 312-5K54FT	18,275	30,890	4,095	(3) 15	166.22	6,407	3,454	4,750
AT 312-5L54FT	18,345	30,960	4,120	(3) 18.5	178.44	6,407	3,454	4,750
AT 312-5M54FT	18,495	31,105	4,170	(3) 22	188.97	6,407	3,454	4,750
AT 312-5N54FT	18,845	31,460	4,285	(3) 30	206.67	6,407	3,454	4,750
AT 312-5O54FT	18,930	31,545	4,315	(3) 37	221.48	6,407	3,454	4,750
AT 312-5P54FT	19,080	31,690	4,365	(3) 45	234.65	6,407	3,454	4,750
SLSF Addition*	1,633	1,633	544			394	394	

NOTE: (1) An adequately sized bleed line must be installed in the cooling tower system to prevent build-up of impurities in the recirculated water.
(2) Do not use catalog drawings for certified prints. Dimensions and weights are subject to change.
(3) Adequate spacing must be allowed for access to the cooling tower. Refer to EVAPCO's Equipment Layout Manual.

✧ Outlet connection extends beyond bottom flange.
† Height includes fan guard which ships factory mounted.
✦ Heaviest section is upper section.
* Additional weight and dimensions for optional SLSF.

Models: AT 312-2K60 to 312-5P60T

Three-Cell Cooling Towers

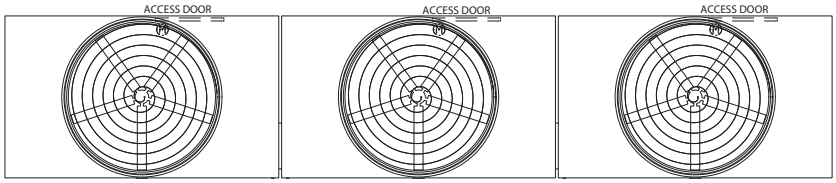

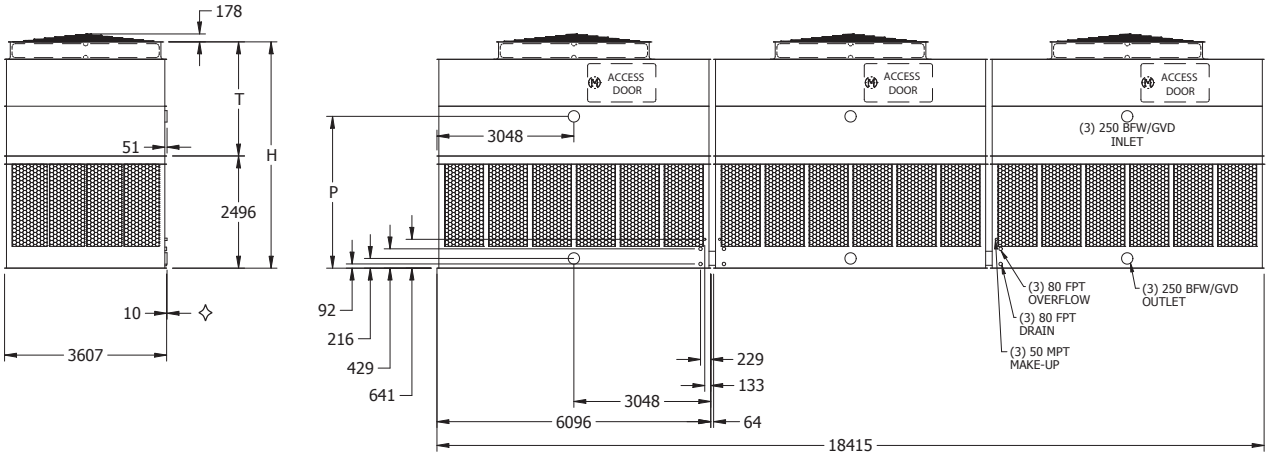

Model No.	Weights (kg)			Fan Motor (kW)	Air Flow (m^3/s)	Dimensions (mm)		
	Shipping	Operating	Heaviest Section✦			H†	T†	P
AT 312-2K60	15,825	29,980	3,270	(3) 15	174.5	5,036	2,540	3,378
AT 312-2L60	15,895	30,045	3,295	(3) 18.5	187.3	5,036	2,540	3,378
AT 312-2M60	16,045	30,195	3,345	(3) 22	198.5	5,036	2,540	3,378
AT 312-2N60	16,395	30,550	3,460	(3) 30	217.1	5,036	2,540	3,378
AT 312-2O60	16,480	30,630	3,490	(3) 37	233.0	5,036	2,540	3,378
AT 312-3K60	16,820	30,970	3,600	(3) 15	171.6	5,340	2,845	3,683
AT 312-3L60	16,885	31,040	3,625	(3) 18.5	184.1	5,340	2,845	3,683
AT 312-3M60	17,035	31,190	3,675	(3) 22	194.9	5,340	2,845	3,683
AT 312-3N60	17,390	31,545	3,790	(3) 30	213.0	5,340	2,845	3,683
AT 312-3O60	17,470	31,625	3,820	(3) 37	228.4	5,340	2,845	3,683
AT 312-4K60	18,045	32,195	4,010	(3) 15	168.8	5,645	3,150	3,988
AT 312-4L60	18,110	32,265	4,030	(3) 18.5	181.1	5,645	3,150	3,988
AT 312-4M60	18,260	32,415	4,080	(3) 22	191.8	5,645	3,150	3,988
AT 312-4N60	18,615	32,770	4,200	(3) 30	209.7	5,645	3,150	3,988
AT 312-4O60	18,695	32,850	4,225	(3) 37	224.7	5,645	3,150	3,988
AT 312-4P60	18,845	33,000	4,275	(3) 45	238.1	5,645	3,150	3,988
AT 312-4K60T	18,350	32,500	4,010	(3) 15	172.26	6,102	3,150	4,445
AT 312-4L60T	18,420	32,570	4,030	(3) 18.5	184.86	6,102	3,150	4,445
AT 312-4M60T	18,570	32,720	4,080	(3) 22	195.81	6,102	3,150	4,445
AT 312-4N60T	18,920	33,075	4,200	(3) 30	214.17	6,102	3,150	4,445
AT 312-4O60T	19,005	33,155	4,225	(3) 37	229.51	6,102	3,150	4,445
AT 312-4P60T	19,155	33,305	4,275	(3) 45	243.24	6,102	3,150	4,445
AT 312-5K60T	19,475	33,625	4,385	(3) 15	169.57	6,407	3,454	4,750
AT 312-5L60T	19,540	33,695	4,405	(3) 18.5	181.94	6,407	3,454	4,750
AT 312-5M60T	19,690	33,845	4,455	(3) 22	192.70	6,407	3,454	4,750
AT 312-5N60T	20,045	34,195	4,575	(3) 30	210.72	6,407	3,454	4,750
AT 312-5O60T	20,125	34,280	4,600	(3) 37	225.78	6,407	3,454	4,750
AT 312-5P60T	20,275	34,430	4,650	(3) 45	239.28	6,407	3,454	4,750
SLSF Addition*	1,633	1,633	544			394	394	

NOTE: (1) An adequately sized bleed line must be installed in the cooling tower system to prevent build-up of impurities in the recirculated water.
(2) Do not use catalog drawings for certified prints. Dimensions and weights are subject to change.
(3) Adequate spacing must be allowed for access to the cooling tower. Refer to EVAPCO's Equipment Layout Manual.

✧ Outlet connection extends beyond bottom flange.
† Height includes fan guard which ships factory mounted.
✦ Heaviest section is upper section.
* Additional weight and dimensions for optional SLSF.

Models: AT 314-2K72 to 314-4Q72

Three-Cell Cooling Towers

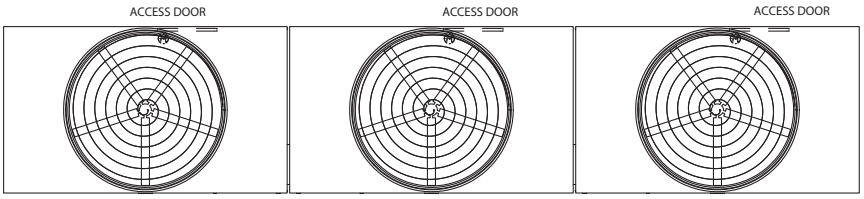

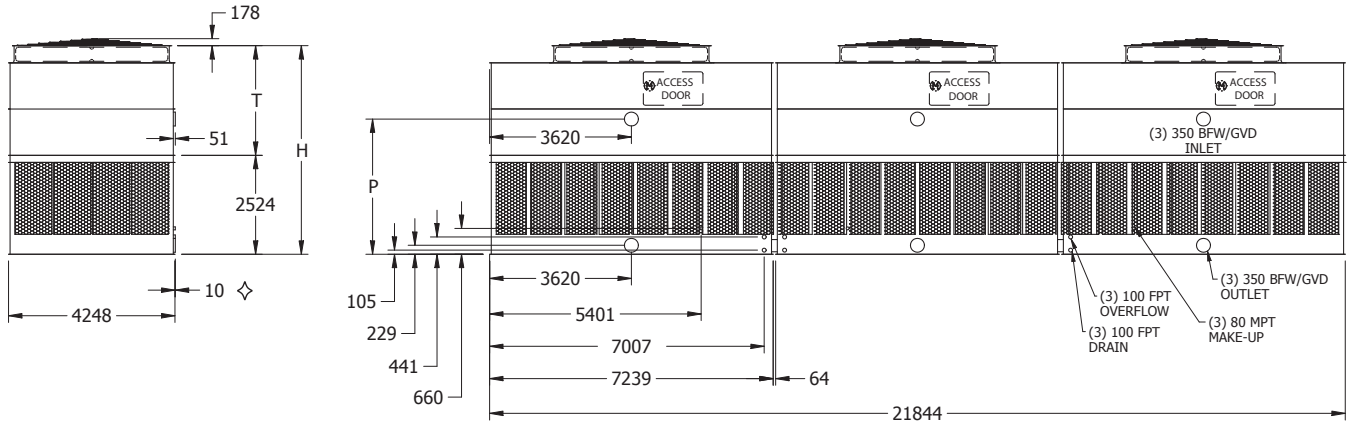

Model No.	Weights (kg)			Fan Motor (kW)	Air Flow (m^3/s)	Dimensions (mm)		
	Shipping	Operating	Heaviest Section✦			H†	T†	P
AT 314-2K72	22,670	44,240	4,810	(3) 15	220.4	5,324	2,800	3,451
AT 314-2L72	22,740	44,305	4,830	(3) 18.5	236.6	5,324	2,800	3,451
AT 314-2M72	22,765	44,335	4,840	(3) 22	250.9	5,324	2,800	3,451
AT 314-2N72	22,970	44,540	4,910	(3) 30	275.2	5,324	2,800	3,451
AT 314-2O72	23,445	45,015	5,065	(3) 37	295.6	5,324	2,800	3,451
AT 314-3K72	24,085	45,655	5,280	(3) 15	217.1	5,629	3,105	3,756
AT 314-3L72	24,155	45,720	5,300	(3) 18.5	232.9	5,629	3,105	3,756
AT 314-3M72	24,180	45,750	5,310	(3) 22	246.9	5,629	3,105	3,756
AT 314-3N72	24,385	45,955	5,380	(3) 30	270.3	5,629	3,105	3,756
AT 314-3O72	24,860	46,430	5,540	(3) 37	290.1	5,629	3,105	3,756
AT 314-3P72	25,095	46,660	5,615	(3) 45	307.1	5,629	3,105	3,756
AT 314-4K72	25,500	47,070	5,750	(3) 15	213.2	5,934	3,410	4,061
AT 314-4L72	25,570	47,135	5,775	(3) 18.5	228.8	5,934	3,410	4,061
AT 314-4M72	25,595	47,165	5,785	(3) 22	242.6	5,934	3,410	4,061
AT 314-4N72	25,800	47,370	5,850	(3) 30	265.8	5,934	3,410	4,061
AT 314-4O72	26,275	47,845	6,010	(3) 37	285.4	5,934	3,410	4,061
AT 314-4P72	26,510	48,075	6,085	(3) 45	302.2	5,934	3,410	4,061
AT 314-4Q72	26,835	48,405	6,195	(3) 55	323.9	5,934	3,410	4,061
SLSF Addition*	1,701	1,701	567			343	343	

NOTE: (1) An adequately sized bleed line must be installed in the cooling tower system to prevent build-up of impurities in the recirculated water.
(2) Do not use catalog drawings for certified prints. Dimensions and weights are subject to change.
(3) Adequate spacing must be allowed for access to the cooling tower. Refer to EVAPCO's Equipment Layout Manual.

✧ Outlet connection extends beyond bottom flange.
† Height includes fan guard which ships factory mounted.
✦ Heaviest section is upper section.
* Additional weight and dimensions for optional SLSF.

Models: AT 314-5K78 to 314-5O78

Three-Cell Cooling Towers

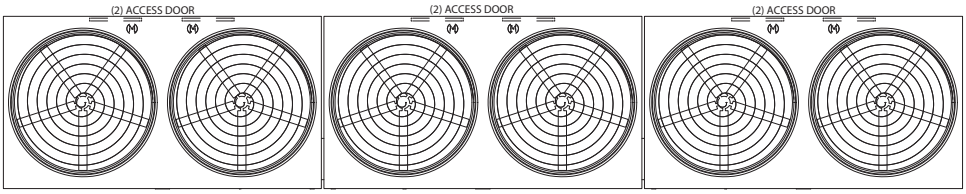

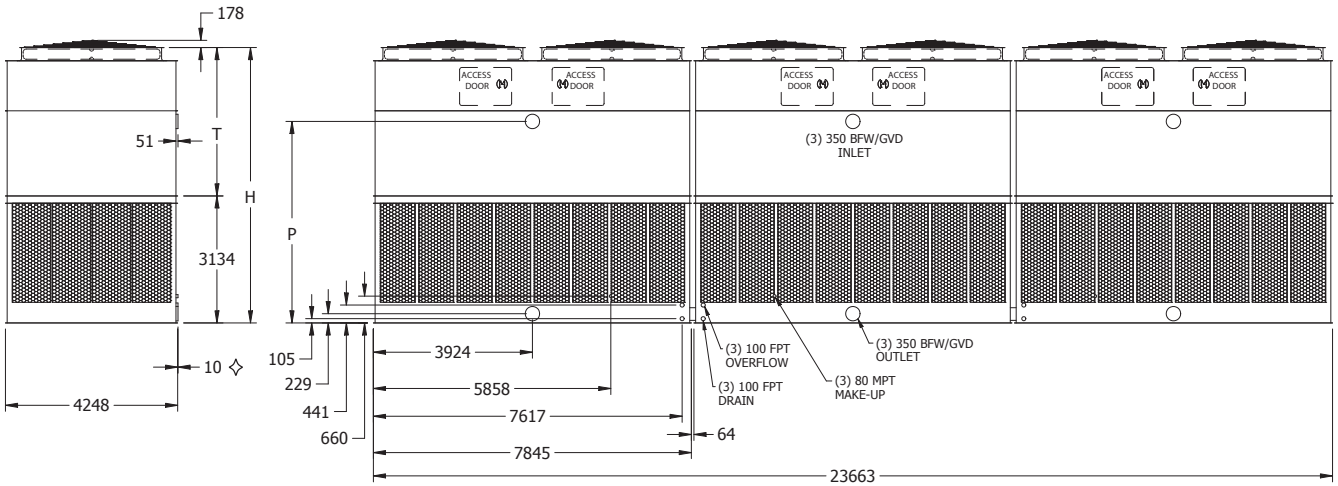

Model No.	Weights (kg)			Fan Motor (kW)	Air Flow (m^3/s)	Dimensions (mm)		
	Shipping	Operating	Heaviest Section✦			H†	T†	P
AT 314-5K78	33,135	56,035	8,010	(6) 15	276.7	6,795	3,661	4,972
AT 314-5L78	33,215	56,120	8,040	(6) 18.5	296.8	6,795	3,661	4,972
AT 314-5M78	33,355	56,255	8,085	(6) 22	314.2	6,795	3,661	4,972
AT 314-5N78	33,790	56,690	8,230	(6) 30	343.6	6,795	3,661	4,972
AT 314-5O78	33,815	56,715	8,235	(6) 37	368.3	6,795	3,661	4,972
SLSF Addition*	✤	3,266	✤			394	394	

NOTE: (1) An adequately sized bleed line must be installed in the cooling tower system to prevent build-up of impurities in the recirculated water.
(2) Do not use catalog drawings for certified prints. Dimensions and weights are subject to change.
(3) Adequate spacing must be allowed for access to the cooling tower. Refer to EVAPCO's Equipment Layout Manual.

✧ Outlet connection extends beyond bottom flange.
† Height includes fan guard which ships factory mounted.
* Additional weight and dimensions for optional SLSF.
✦ Heaviest section is upper section.
✤ Please consult the factory for additional information regarding shipping and section weight changes.

Models: AT 342-5K26 to 342-5O26

Three-Cell Cooling Towers

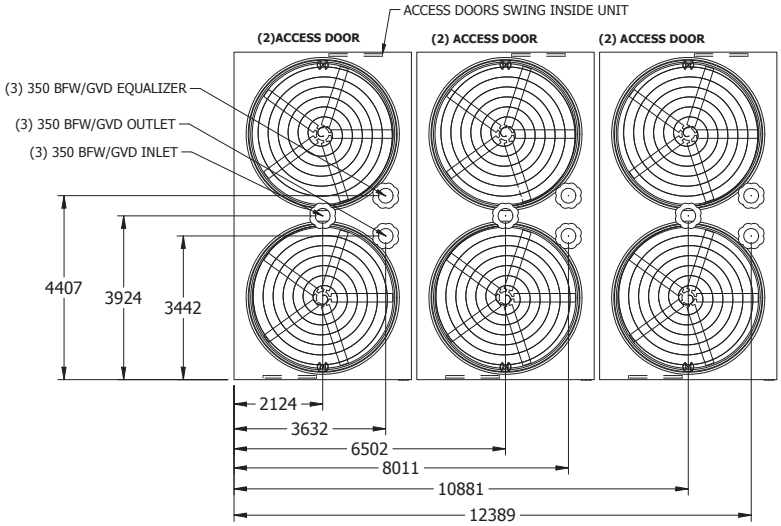

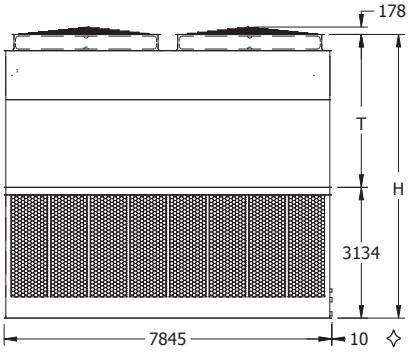

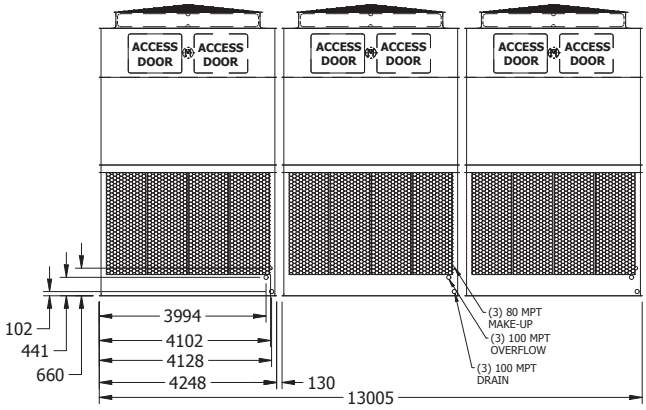

Model No.	Weights (kg)			Fan Motor (kW)	Air Flow (m^3/s)	Dimensions (mm)	
	Shipping	Operating	Heaviest Section✦			H†	T†
AT 342-5K26	33,530	56,430	8,010	(6) 15	277.8	6,795	3,661
AT 342-5L26	33,610	56,515	8,040	(6) 18.5	298.0	6,795	3,661
AT 342-5M26	33,745	56,650	8,085	(6) 22	315.5	6,795	3,661
AT 342-5N26	34,185	57,085	8,230	(6) 30	345.1	6,795	3,661
AT 342-5O26	34,210	57,110	8,235	(6) 37	369.9	6,795	3,661
SLSF Addition*	✤	3,266	✤			394	394

NOTE: (1) An adequately sized bleed line must be installed in the cooling tower system to prevent build-up of impurities in the recirculated water.
(2) Do not use catalog drawings for certified prints. Dimensions and weights are subject to change.
(3) Adequate spacing must be allowed for access to the cooling tower. Refer to EVAPCO's Equipment Layout Manual.

✧ Outlet connection extends beyond bottom flange.
† Height includes fan guard which ships factory mounted.
* Additional weight and dimensions for optional SLSF.
✦ Heaviest section is upper section.
✤ Please consult the factory for additional information regarding shipping and section weight changes.

Models: AT 424-2I24 to 424-5N24T

Four-Cell Cooling Towers

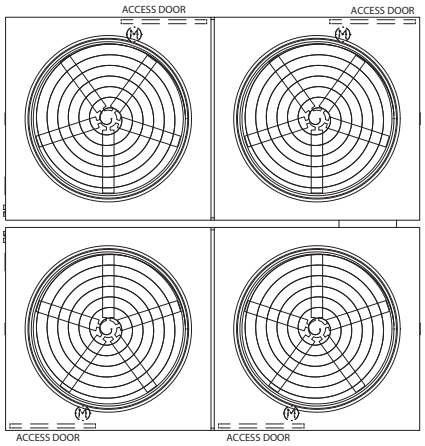

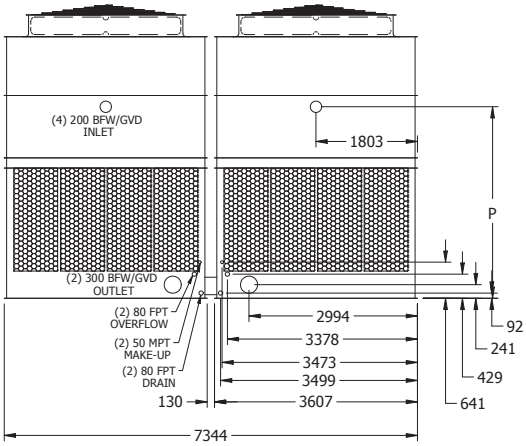

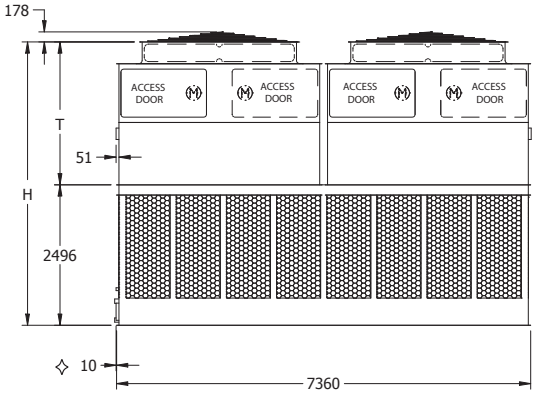

Model No.	Weights (kg)			Fan Motor (kW)	Air Flow (m^3/s)	Dimensions (mm)		
	Shipping	Operating	Heaviest Section✦			H†	T†	P
AT 424-2I24	14,070	25,100	2,625 (L)	(4) 7.5	133.8	5,036	2,540	3,404
AT 424-2J24	14,325	25,355	2,625 (L)	(4) 11	152.1	5,036	2,540	3,404
AT 424-2K24	14,415	25,445	2,625 (L)	(4) 15	166.8	5,036	2,540	3,404
AT 424-2L24	14,505	25,535	2,625 (L)	(4) 18.5	179.1	5,036	2,540	3,404
AT 424-2M24	14,685	25,720	2,625 (L)	(4) 22	189.7	5,036	2,540	3,404
AT 424-3I24	15,050	26,080	2,625 (L)	(4) 7.5	131.8	5,340	2,845	3,708
AT 424-3J24	15,305	26,335	2,625 (L)	(4) 11	149.6	5,340	2,845	3,708
AT 424-3K24	15,395	26,425	2,625 (L)	(4) 15	163.8	5,340	2,845	3,708
AT 424-3L24	15,485	26,515	2,625 (L)	(4) 18.5	175.7	5,340	2,845	3,708
AT 424-3M24	15,665	26,700	2,625 (L)	(4) 22	186.0	5,340	2,845	3,708
AT 424-4I24	15,940	26,970	2,670 (U)	(4) 7.5	129.5	5,645	3,150	4,013
AT 424-4J24	16,195	27,225	2,735 (U)	(4) 11	147.2	5,645	3,150	4,013
AT 424-4K24	16,285	27,315	2,760 (U)	(4) 15	161.2	5,645	3,150	4,013
AT 424-4L24	16,375	27,405	2,780 (U)	(4) 18.5	172.8	5,645	3,150	4,013
AT 424-4M24	16,555	27,585	2,825 (U)	(4) 22	182.9	5,645	3,150	4,013
AT 424-4N24	17,010	28,040	2,940 (U)	(4) 30	200.2	5,645	3,150	4,013
AT 424-4I24T	16,170	27,200	2,740	(4) 7.5	132.05	6,102	3,150	4,470
AT 424-4J24T	16,425	27,455	2,740	(4) 11	150.08	6,102	3,150	4,470
AT 424-4K24T	16,515	27,545	2,760	(4) 15	164.33	6,102	3,150	4,470
AT 424-4L24T	16,605	27,635	2,780	(4) 18.5	176.18	6,102	3,150	4,470
AT 424-4M24T	16,785	27,820	2,825	(4) 22	186.42	6,102	3,150	4,470
AT 424-4N24T	17,240	28,270	2,940	(4) 30	204.12	6,102	3,150	4,470
AT 424-5I24T	17,130	28,165	2,910	(4) 7.5	129.93	6,407	3,454	4,775
AT 424-5J24T	17,385	28,420	2,975	(4) 11	147.63	6,407	3,454	4,775
AT 424-5K24T	17,475	28,510	3,000	(4) 15	161.59	6,407	3,454	4,775
AT 424-5L24T	17,570	28,600	3,020	(4) 18.5	173.20	6,407	3,454	4,775
AT 424-5M24T	17,750	28,780	3,065	(4) 22	183.26	6,407	3,454	4,775
AT 424-5N24T	18,205	29,235	3,180	(4) 30	200.67	6,407	3,454	4,775
SLSF Addition*	✤	2,177	✤			546	546	

NOTE: (1) An adequately sized bleed line must be installed in the cooling tower system to prevent build-up of impurities in the recirculated water.
(2) Do not use catalog drawings for certified prints. Dimensions and weights are subject to change.
(3) Adequate spacing must be allowed for access to the cooling tower. Refer to EVAPCO's Equipment Layout Manual.

✧ Outlet connection extends beyond bottom flange.
† Height includes fan guard which ships factory mounted.
* Additional weight and dimensions for optional SLSF.
✦ L=Lower Section, U=Upper Section
✤ Please consult the factory for additional information regarding shipping and section weight changes.

Models: AT 424-2I28 to 424-5N28T

Four-Cell Cooling Towers

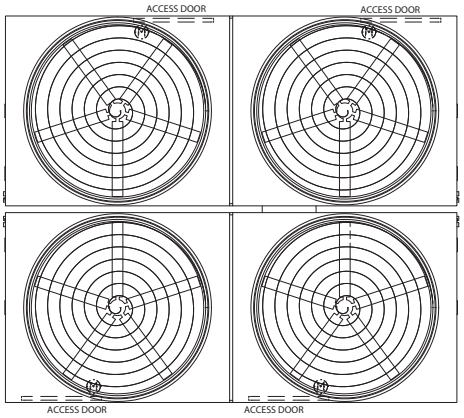

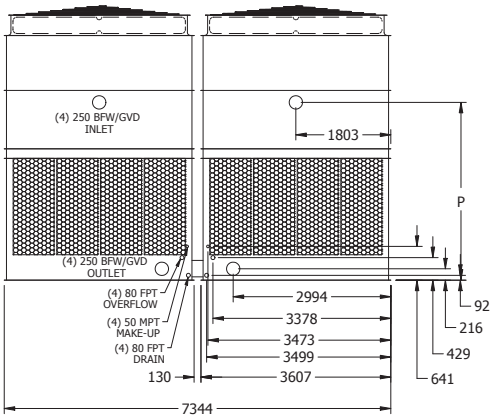

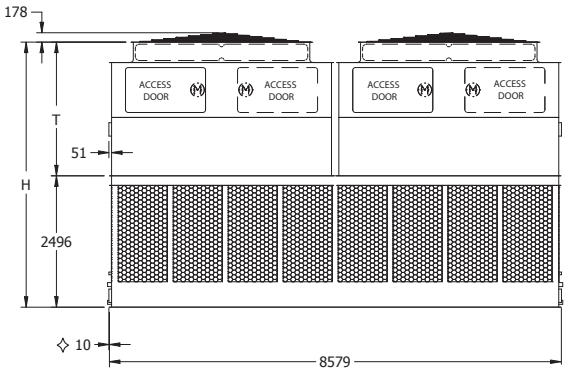

Model No.	Weights (kg)			Fan Motor (kW)	Air Flow (m^3/s)	Dimensions (mm)		
	Shipping	Operating	Heaviest Section✦			H†	T†	P
AT 424-2I28	15,540	28,650	2,970 (L)	(4) 7.5	141.3	5,036	2,540	3,378
AT 424-2J28	15,795	28,905	2,970 (L)	(4) 11	160.6	5,036	2,540	3,378
AT 424-2K28	15,905	29,010	2,970 (L)	(4) 15	176.0	5,036	2,540	3,378
AT 424-2L28	16,010	29,120	2,970 (L)	(4) 18.5	188.9	5,036	2,540	3,378
AT 424-2M28	16,140	29,250	2,970 (L)	(4) 22	200.0	5,036	2,540	3,378
AT 424-3I28	16,740	29,845	2,970 (L)	(4) 7.5	139.2	5,340	2,845	3,683
AT 424-3J28	16,990	30,100	2,970 (L)	(4) 11	158.1	5,340	2,845	3,683
AT 424-3K28	17,100	30,210	2,970 (L)	(4) 15	173.0	5,340	2,845	3,683
AT 424-3L28	17,210	30,320	2,970 (L)	(4) 18.5	185.6	5,340	2,845	3,683
AT 424-3M28	17,335	30,445	2,970 (L)	(4) 22	196.4	5,340	2,845	3,683
AT 424-3N28	17,810	30,915	2,970 (L)	(4) 30	215.0	5,340	2,845	3,683
AT 424-4I28	17,680	30,790	2,970 (L)	(4) 7.5	136.8	5,645	3,150	3,988
AT 424-4J28	17,935	31,045	3,000 (U)	(4) 11	155.6	5,645	3,150	3,988
AT 424-4K28	18,045	31,155	3,025 (U)	(4) 15	170.2	5,645	3,150	3,988
AT 424-4L28	18,155	31,260	3,055 (U)	(4) 18.5	182.6	5,645	3,150	3,988
AT 424-4M28	18,280	31,390	3,085 (U)	(4) 22	193.3	5,645	3,150	3,988
AT 424-4N28	18,750	31,860	3,200 (U)	(4) 30	211.4	5,645	3,150	3,988
AT 424-4I28T	17,920	31,030	3,090	(4) 7.5	139.41	6,102	3,150	4,445
AT 424-4J28T	18,175	31,285	3,090	(4) 11	158.53	6,102	3,150	4,445
AT 424-4K28T	18,285	31,395	3,090	(4) 15	173.49	6,102	3,150	4,445
AT 424-4L28T	18,395	31,500	3,090	(4) 18.5	186.14	6,102	3,150	4,445
AT 424-4M28T	18,520	31,630	3,090	(4) 22	196.99	6,102	3,150	4,445
AT 424-4N28T	18,990	32,100	3,200	(4) 30	215.44	6,102	3,150	4,445
AT 424-5I28T	19,020	32,130	3,210	(4) 7.5	137.24	6,407	3,454	4,750
AT 424-5J28T	19,275	32,380	3,275	(4) 11	156.03	6,407	3,454	4,750
AT 424-5K28T	19,380	32,490	3,300	(4) 15	170.75	6,407	3,454	4,750
AT 424-5L28T	19,490	32,600	3,325	(4) 18.5	183.12	6,407	3,454	4,750
AT 424-5M28T	19,620	32,725	3,360	(4) 22	193.83	6,407	3,454	4,750
AT 424-5N28T	20,090	33,200	3,475	(4) 30	211.90	6,407	3,454	4,750
SLSF Addition*	✤	2,177	✤			393	546	

NOTE: (1) An adequately sized bleed line must be installed in the cooling tower system to prevent build-up of impurities in the recirculated water.
(2) Do not use catalog drawings for certified prints. Dimensions and weights are subject to change.
(3) Adequate spacing must be allowed for access to the cooling tower. Refer to EVAPCO's Equipment Layout Manual.

✧ Outlet connection extends beyond bottom flange.
† Height includes fan guard which ships factory mounted.
* Additional weight and dimensions for optional SLSF.
✦ L=Lower Section, U=Upper Section
✤ Please consult the factory for additional information regarding shipping and section weight changes.

Models: AT 424-2J36F to 424-5P36FT

Four-Cell Cooling Towers

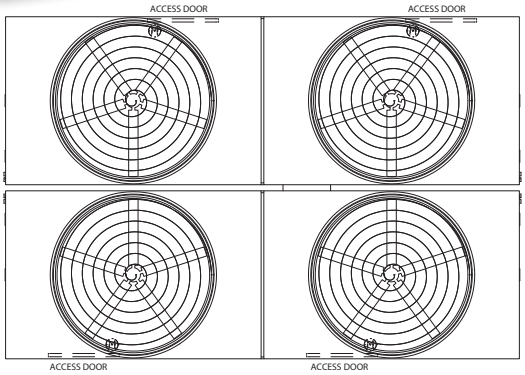

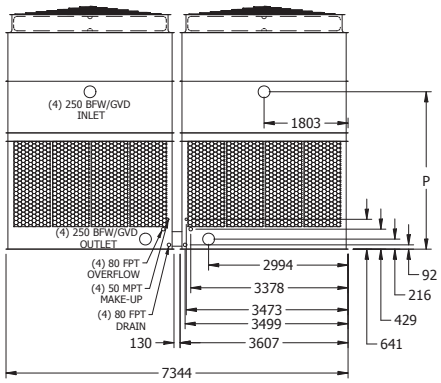

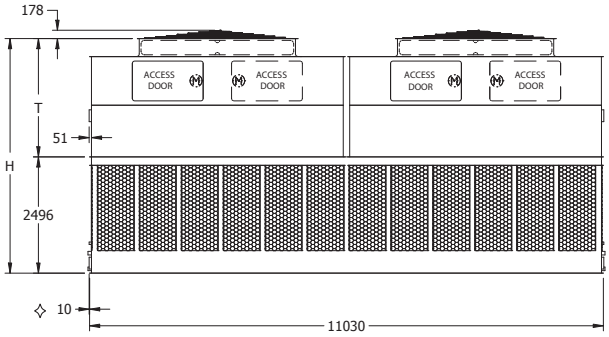

Model No.	Weights (kg)			Fan Motor (kW)	Air Flow (m^3/s)	Dimensions (mm)		
	Shipping	Operating	Heaviest Section✦			H†	T†	P
AT 424-2J36F	19,885	36,530	3,865 (L)	(4) 11	199.7	5,036	2,540	3,378
AT 424-2K36F	19,995	36,640	3,865 (L)	(4) 15	218.7	5,036	2,540	3,378
AT 424-2L36F	20,085	36,730	3,865 (L)	(4) 18.5	235.0	5,036	2,540	3,378
AT 424-2M36F	20,285	36,930	3,865 (L)	(4) 22	249.1	5,036	2,540	3,378
AT 424-2N36F	20,755	37,405	3,865 (L)	(4) 30	273.0	5,036	2,540	3,378
AT 424-3J36F	21,300	37,950	3,865 (L)	(4) 11	196.8	5,340	2,845	3,683
AT 424-3K36F	21,410	38,055	3,865 (L)	(4) 15	215.3	5,340	2,845	3,683
AT 424-3L36F	21,500	38,145	3,865 (L)	(4) 18.5	231.1	5,340	2,845	3,683
AT 424-3M36F	21,700	38,345	3,865 (L)	(4) 22	244.8	5,340	2,845	3,683
AT 424-3N36F	22,170	38,820	3,865 (L)	(4) 30	267.8	5,340	2,845	3,683
AT 424-3O36F	22,280	38,925	3,865 (L)	(4) 37	287.3	5,340	2,845	3,683
AT 424-4J36F	22,645	39,290	3,865 (L)	(4) 11	193.4	5,645	3,150	3,988
AT 424-4K36F	22,750	39,400	3,865 (L)	(4) 15	211.8	5,645	3,150	3,988
AT 424-4L36F	22,845	39,490	3,865 (L)	(4) 18.5	227.4	5,645	3,150	3,988
AT 424-4M36F	23,040	39,690	3,865 (L)	(4) 22	240.8	5,645	3,150	3,988
AT 424-4N36F	23,515	40,160	3,945 (U)	(4) 30	263.5	5,645	3,150	3,988
AT 424-4O36F	23,625	40,270	3,975 (U)	(4) 37	282.4	5,645	3,150	3,988
AT 424-4P36F	23,825	40,470	4,025 (U)	(4) 45	299.2	5,645	3,150	3,988
AT 424-4J36FT	22,945	39,595	4,015	(4) 11	197.42	6,102	3,150	4,445
AT 424-4K36FT	23,055	39,705	4,015	(4) 15	216.20	6,102	3,150	4,445
AT 424-4L36FT	23,145	39,795	4,015	(4) 18.5	232.20	6,102	3,150	4,445
AT 424-4M36FT	23,345	39,995	4,015	(4) 22	245.93	6,102	3,150	4,445
AT 424-4N36FT	23,820	40,465	4,015	(4) 30	269.10	6,102	3,150	4,445
AT 424-4O36FT	23,925	40,575	4,015	(4) 37	288.41	6,102	3,150	4,445
AT 424-4P36FT	24,125	40,775	4,025	(4) 45	305.63	6,102	3,150	4,445
AT 424-5J36FT	24,315	40,965	4,070	(4) 11	194.35	6,407	3,454	4,750
AT 424-5K36FT	24,425	41,075	4,100	(4) 15	212.80	6,407	3,454	4,750
AT 424-5L36FT	24,515	41,165	4,120	(4) 18.5	228.52	6,407	3,454	4,750
AT 424-5M36FT	24,715	41,365	4,170	(4) 22	242.01	6,407	3,454	4,750
AT 424-5N36FT	25,190	41,835	4,290	(4) 30	264.72	6,407	3,454	4,750
AT 424-5O36FT	25,295	41,945	4,315	(4) 37	283.73	6,407	3,454	4,750
AT 424-5P36FT	25,495	42,145	4,365	(4) 45	300.63	6,407	3,454	4,750
SLSF Addition*	✤	2,177	✤			394	394	

NOTE:
(1) An adequately sized bleed line must be installed in the cooling tower system to prevent build-up of impurities in the recirculated water.
(2) Do not use catalog drawings for certified prints. Dimensions and weights are subject to change.
(3) Adequate spacing must be allowed for access to the cooling tower. Refer to EVAPCO's Equipment Layout Manual.
(4) Optional Dual Fan units will have a "-DF" at the end of the model number in Spectrum. Fan kW and weights may vary.

✧ Outlet connection extends beyond bottom flange.
† Height includes fan guard which ships factory mounted.
* Additional weight and dimensions for optional SLSF.
✦ L= Lower Section, U = Upper Section
✤ Please consult the factory for additional information regarding shipping and section weight changes.

Models: AT 424-2K40F to 424-5P40FT

Four-Cell Cooling Towers

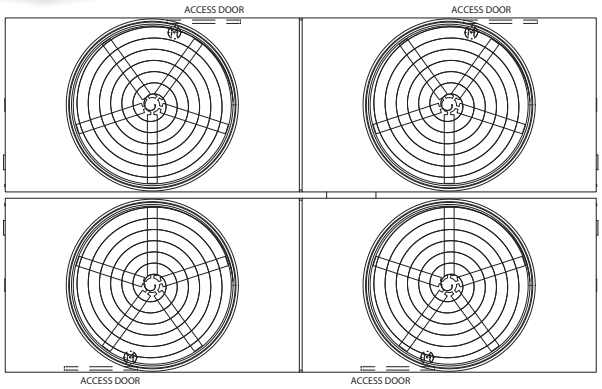

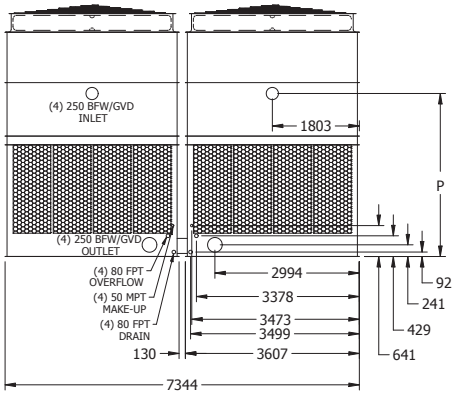

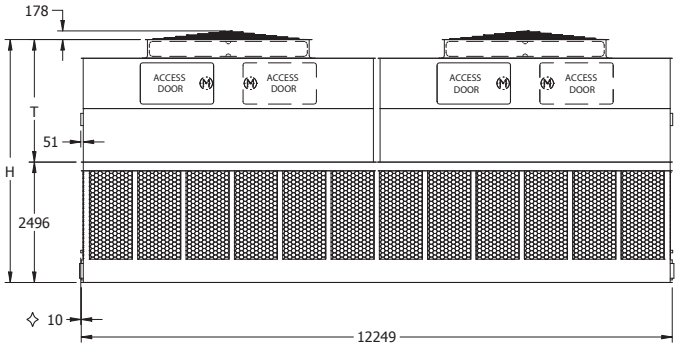

Model No.	Weights (kg)			Fan Motor (kW)	Air Flow (m^3/s)	Dimensions (mm)		
	Shipping	Operating	Heaviest Section✦			H†	T†	P
AT 424-2K40F	21,245	39,935	3,865 (L)	(4) 15	222.9	5,036	2,540	3,378
AT 424-2L40F	21,335	40,025	3,865 (L)	(4) 18.5	239.2	5,036	2,540	3,378
AT 424-2M40F	21,535	40,225	3,865 (L)	(4) 22	253.4	5,036	2,540	3,378
AT 424-2N40F	22,010	40,695	3,865 (L)	(4) 30	277.3	5,036	2,540	3,378
AT 424-2O40F	22,115	40,805	3,865 (L)	(4) 37	297.5	5,036	2,540	3,378
AT 424-3K40F	22,570	41,260	3,865 (L)	(4) 15	219.2	5,340	2,845	3,683
AT 424-3L40F	22,660	41,350	3,865 (L)	(4) 18.5	235.2	5,340	2,845	3,683
AT 424-3M40F	22,860	41,550	3,865 (L)	(4) 22	249.0	5,340	2,845	3,683
AT 424-3N40F	23,335	42,020	3,865 (L)	(4) 30	272.2	5,340	2,845	3,683
AT 424-3O40F	23,440	42,130	3,865 (L)	(4) 37	291.8	5,340	2,845	3,683
AT 424-4K40F	24,205	42,890	3,865 (L)	(4) 15	215.4	5,645	3,150	3,988
AT 424-4L40F	24,295	42,980	3,865 (L)	(4) 18.5	231.2	5,645	3,150	3,988
AT 424-4M40F	24,495	43,180	3,865 (L)	(4) 22	244.9	5,645	3,150	3,988
AT 424-4N40F	24,965	43,655	3,865 (L)	(4) 30	267.9	5,645	3,150	3,988
AT 424-4O40F	25,075	43,765	3,865 (L)	(4) 37	287.1	5,645	3,150	3,988
AT 424-4P40F	25,275	43,960	3,945 (U)	(4) 45	304.3	5,645	3,150	3,988
AT 424-4K40FT	24,510	43,200	4,235	(4) 15	219.93	6,102	3,150	4,445
AT 424-4L40FT	24,605	43,290	4,235	(4) 18.5	236.02	6,102	3,150	4,445
AT 424-4M40FT	24,800	43,490	4,235	(4) 22	250.04	6,102	3,150	4,445
AT 424-4N40FT	25,275	43,960	4,235	(4) 30	273.54	6,102	3,150	4,445
AT 424-4O40FT	25,385	44,070	4,235	(4) 37	293.22	6,102	3,150	4,445
AT 424-4P40FT	25,585	44,270	4,275	(4) 45	310.82	6,102	3,150	4,445
AT 424-5K40FT	26,010	44,695	4,385	(4) 15	216.48	6,407	3,454	4,750
AT 424-5L40FT	26,100	44,790	4,405	(4) 18.5	232.34	6,407	3,454	4,750
AT 424-5M40FT	26,300	44,985	4,455	(4) 22	246.12	6,407	3,454	4,750
AT 424-5N40FT	26,770	45,460	4,575	(4) 30	269.20	6,407	3,454	4,750
AT 424-5O40FT	26,880	45,570	4,600	(4) 37	288.45	6,407	3,454	4,750
AT 424-5P40FT	27,080	45,765	4,650	(4) 45	305.77	6,407	3,454	4,750
SLSF Addition*	✤	2,177	✤			394		

NOTE: (1) An adequately sized bleed line must be installed in the cooling tower system to prevent build-up of impurities in the recirculated water.
(2) Do not use catalog drawings for certified prints. Dimensions and weights are subject to change.
(3) Adequate spacing must be allowed for access to the cooling tower. Refer to EVAPCO's Equipment Layout Manual.
(4) Optional Dual Fan units will have a "-DF" at the end of the model number in Spectrum. Fan kW and weights may vary.

✧ Outlet connection extends beyond bottom flange.
† Height includes fan guard which ships factory mounted.
* Additional weight and dimensions for optional SLSF.
✦ L= Lower Section, U = Upper Section
✤ Please consult the factory for additional information regarding shipping and section weight changes.

Models: AT 428-2K36 to 428-4Q36

Four-Cell Cooling Towers

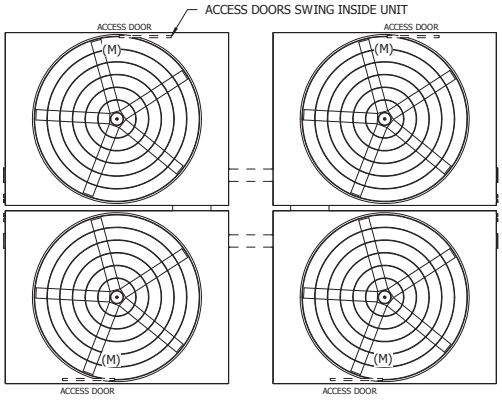

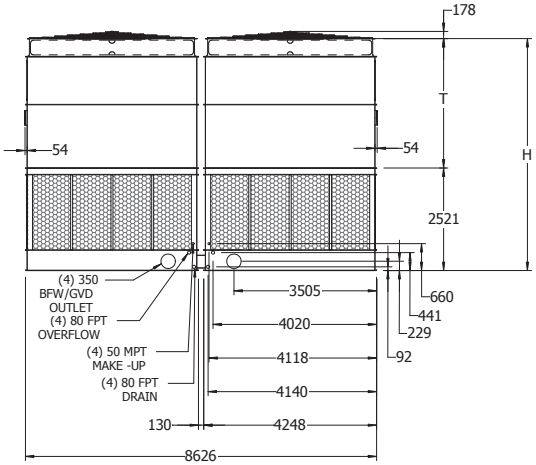

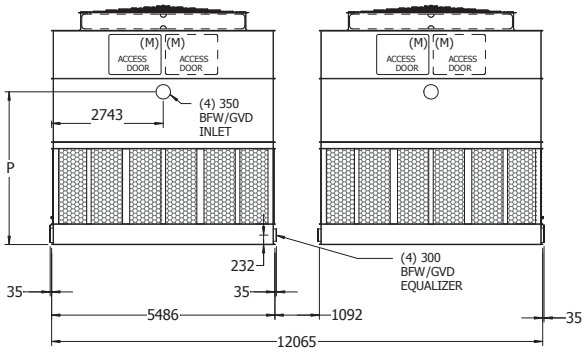

Model No.	Weights (kg)			Fan Motor (kW)	Air Flow (m^3/s)	Dimensions (mm)		
	Shipping	Operating	Heaviest Section✦			H†	T†	P
AT 428-2K36	28,050	45,670	4,705	(4) 15	233.0	5,394	2,870	3,448
AT 428-2L36	28,140	45,760	4,725	(4) 18.5	250.3	5,394	2,870	3,448
AT 428-2M36	28,175	45,795	4,735	(4) 22	265.3	5,394	2,870	3,448
AT 428-2N36	28,450	46,065	4,805	(4) 30	291.0	5,394	2,870	3,448
AT 428-2O36	29,085	46,700	4,960	(4) 37	312.5	5,394	2,870	3,448
AT 428-3K36	29,790	47,410	5,140	(4) 15	229.2	5,699	3,175	3,753
AT 428-3L36	29,885	47,500	5,160	(4) 18.5	246.2	5,699	3,175	3,753
AT 428-3M36	29,920	47,535	5,170	(4) 22	260.9	5,699	3,175	3,753
AT 428-3N36	30,190	47,810	5,240	(4) 30	285.9	5,699	3,175	3,753
AT 428-3O36	30,825	48,445	5,400	(4) 37	306.9	5,699	3,175	3,753
AT 428-3P36	31,135	48,750	5,475	(4) 45	325.0	5,699	3,175	3,753
AT 428-4K36	31,280	48,895	5,510	(4) 15	225.0	6,004	3,480	4,058
AT 428-4L36	31,370	48,990	5,535	(4) 18.5	241.7	6,004	3,480	4,058
AT 428-4M36	31,405	49,025	5,545	(4) 22	256.3	6,004	3,480	4,058
AT 428-4N36	31,680	49,295	5,610	(4) 30	280.9	6,004	3,480	4,058
AT 428-4O36	32,315	49,930	5,770	(4) 37	301.6	6,004	3,480	4,058
AT 428-4P36	32,620	50,240	5,845	(4) 45	319.6	6,004	3,480	4,058
AT 428-4Q36	33,060	50,675	5,955	(4) 55	343.1	6,004	3,480	4,058
SLSF Addition*	2,268	2,268	567			343	343	

NOTE: (1) An adequately sized bleed line must be installed in the cooling tower system to prevent build-up of impurities in the recirculated water.
(2) Do not use catalog drawings for certified prints. Dimensions and weights are subject to change.
(3) Adequate spacing must be allowed for access to the cooling tower. Refer to EVAPCO's Equipment Layout Manual.

✧ Outlet connection extends beyond bottom flange.
† Height includes fan guard which ships factory mounted.
✦ Heaviest section is upper section.
* Additional weight and dimensions for optional SLSF.

Models: AT 428-2K48 to 428-4R48*

Four-Cell Cooling Towers

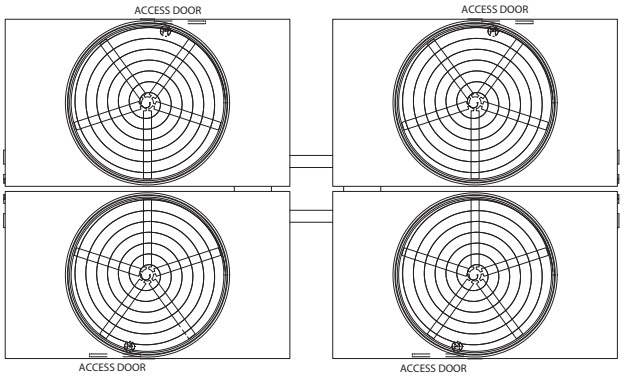

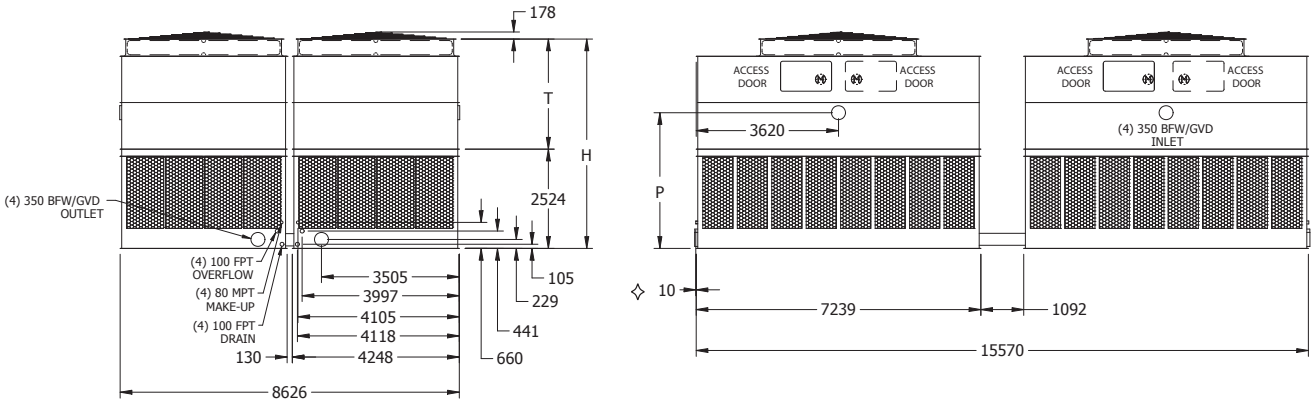

Model No.	Weights (kg)			Fan Motor (kW)	Air Flow (m^3/s)	Dimensions (mm)		
	Shipping	Operating	Heaviest Section✦			H†	T†	P
AT 428-2K48	30,190	58,950	4,810	(4) 15	281.0	5,324	2,800	3,451
AT 428-2L48	30,280	59,040	4,830	(4) 18.5	301.6	5,324	2,800	3,451
AT 428-2M48	30,320	59,075	4,840	(4) 22	319.8	5,324	2,800	3,451
AT 428-2N48	30,590	59,350	4,910	(4) 30	350.9	5,324	2,800	3,451
AT 428-2O48	31,225	59,985	5,065	(4) 37	376.9	5,324	2,800	3,451
AT 428-3K48	32,080	60,835	5,280	(4) 15	276.7	5,629	3,105	3,756
AT 428-3L48	32,170	60,925	5,300	(4) 18.5	297.0	5,629	3,105	3,756
AT 428-3M48	32,205	60,965	5,310	(4) 22	314.9	5,629	3,105	3,756
AT 428-3N48	32,475	61,235	5,380	(4) 30	344.9	5,629	3,105	3,756
AT 428-3O48	33,110	61,870	5,540	(4) 37	370.1	5,629	3,105	3,756
AT 428-3P48	33,420	62,180	5,615	(4) 45	391.8	5,629	3,105	3,756
AT 428-4K48	33,965	62,725	5,750	(4) 15	271.7	5,934	3,410	4,061
AT 428-4L48	34,055	62,815	5,775	(4) 18.5	291.7	5,934	3,410	4,061
AT 428-4M48	34,090	62,850	5,785	(4) 22	309.3	5,934	3,410	4,061
AT 428-4N48	34,365	63,120	5,850	(4) 30	338.9	5,934	3,410	4,061
AT 428-4O48	35,000	63,755	6,010	(4) 37	364.0	5,934	3,410	4,061
AT 428-4P48	35,310	64,065	6,085	(4) 45	385.5	5,934	3,410	4,061
AT 428-4Q48	35,745	64,500	6,195	(4) 55	413.3	5,934	3,410	4,061
AT 428-4R48*	36,540	65,300	6,395	(4) 75	453.1	5,934	3,410	4,061
SLSF Addition**	2,268	2,268	567			343	343	

* Model available with gear drive only. Motors and access doors located on 4,248 mm unit ends. Super Low Sound Fan is not available on this unit.

NOTE: (1) An adequately sized bleed line must be installed in the cooling tower system to prevent build-up of impurities in the recirculated water.
(2) Do not use catalog drawings for certified prints. Dimensions and weights are subject to change.
(3) Adequate spacing must be allowed for access to the cooling tower. Refer to EVAPCO's Equipment Layout Manual.

✧ Outlet connection extends beyond bottom flange.
† Height includes fan guard which ships factory mounted.
✦ Heaviest section is upper section.
** Additional weight and dimensions for optional SLSF.

Models: AT 428-5K52 to 428-5O52

Four-Cell Cooling Towers

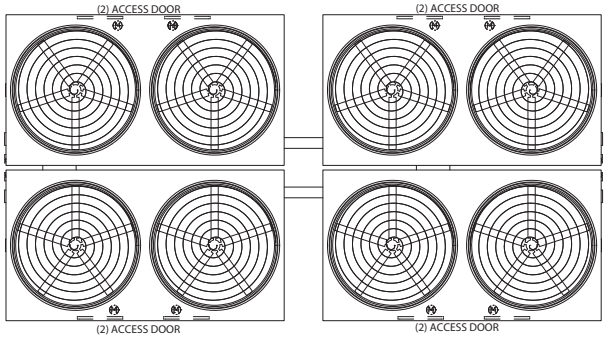

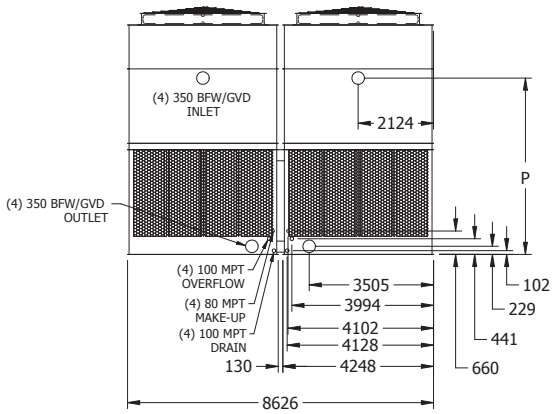

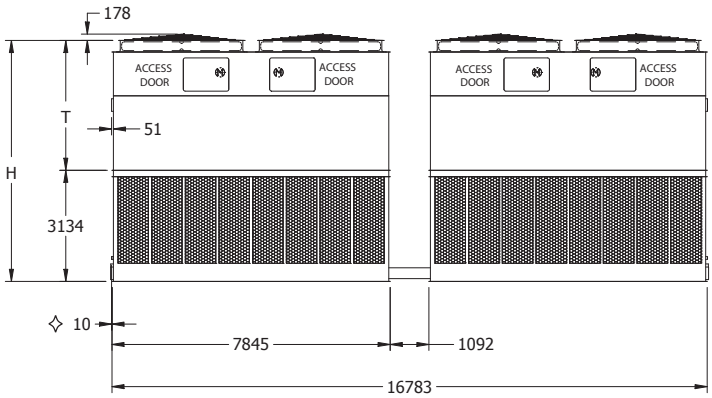

Model No.	Weights (kg)			Fan Motor (kW)	Air Flow (m^3/s)	Dimensions (mm)		
	Shipping	Operating	Heaviest Section✦			H†	T†	P
AT 428-5K52	44,090	74,625	8,010	(8) 15	352.2	6,795	3,661	4,972
AT 428-5L52	44,200	74,735	8,040	(8) 18.5	377.7	6,795	3,661	4,972
AT 428-5M52	44,380	74,915	8,085	(8) 22	400.0	6,795	3,661	4,972
AT 428-5N52	44,960	75,495	8,230	(8) 30	437.5	6,795	3,661	4,972
AT 428-5O52	44,995	75,530	8,235	(8) 37	468.8	6,795	3,661	4,972
SLSF Addition*	✤	4,354	✤			394	394	

NOTE: (1) An adequately sized bleed line must be installed in the cooling tower system to prevent build-up of impurities in the recirculated water.
(2) Do not use catalog drawings for certified prints. Dimensions and weights are subject to change.
(3) Adequate spacing must be allowed for access to the cooling tower. Refer to EVAPCO's Equipment Layout Manual.

✧ Outlet connection extends beyond bottom flange.
† Height includes fan guard which ships factory mounted.
* Additional weight and dimensions for optional SLSF.
✦ Heaviest section is upper section.
✤ Please consult the factory for additional information regarding shipping and section weight changes.

Models: AT 456-5K26 to 456-5O26

Four-Cell Cooling Towers

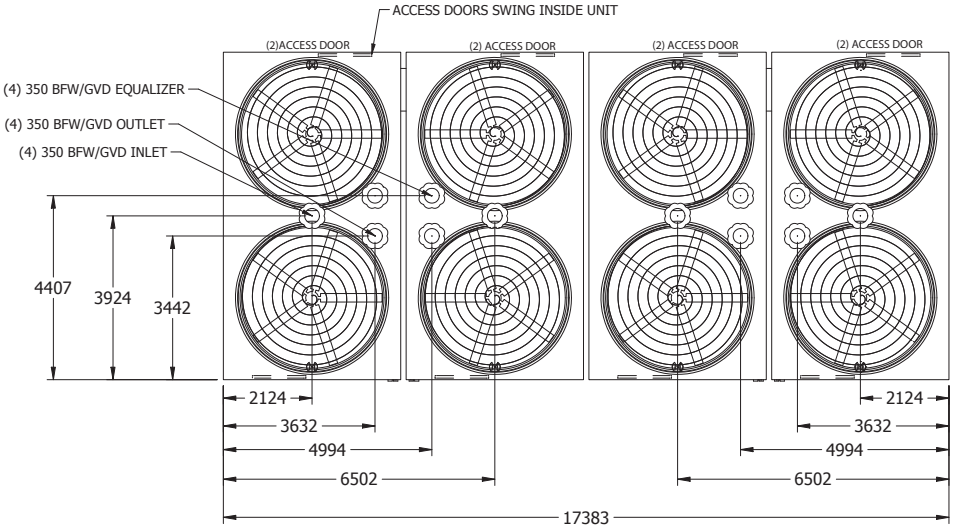

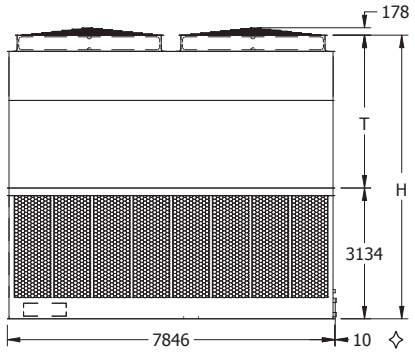

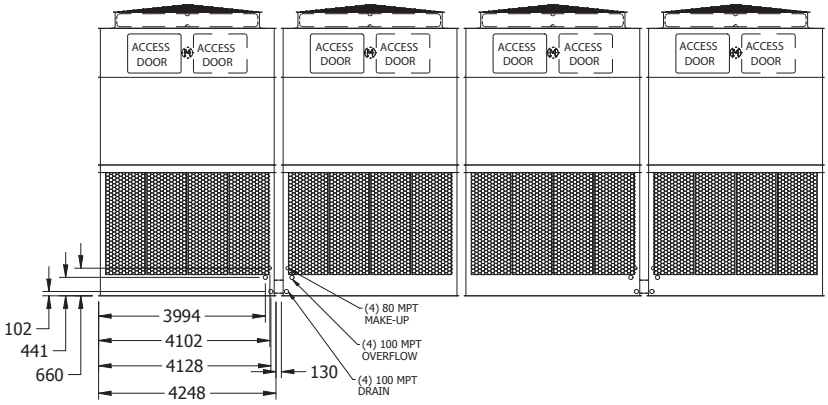

Model No.	Weights (kg)			Fan Motor (kW)	Air Flow (m^3/s)	Dimensions (mm)	
	Shipping	Operating	Heaviest Section✦			H†	T†
AT 456-5K26	44,705	75,240	8,010	(8) 15	352.5	6,795	3,661
AT 456-5L26	44,815	75,350	8,040	(8) 18.5	378.1	6,795	3,661
AT 456-5M26	44,995	75,530	8,085	(8) 22	400.3	6,795	3,661
AT 456-5N26	45,575	76,115	8,230	(8) 30	437.9	6,795	3,661
AT 456-5O26	45,615	76,150	8,235	(8) 37	469.3	6,795	3,661
SLSF Addition*	✤	4,354	✤			394	

NOTE: (1) An adequately sized bleed line must be installed in the cooling tower system to prevent build-up of impurities in the recirculated water.
(2) Do not use catalog drawings for certified prints. Dimensions and weights are subject to change.
(3) Adequate spacing must be allowed for access to the cooling tower. Refer to EVAPCO's Equipment Layout Manual.

✧ Outlet connection extends beyond bottom flange.
† Height includes fan guard which ships factory mounted.
* Additional weight and dimensions for optional SLSF.
✦ Heaviest section is upper section.
✤ Please consult the factory for additional information regarding shipping and section weight changes.

Drain Down Volume for Remote Sump Applications

The following chart provides the maximum drain down volume allowable per AT model number. Use this chart when sizing indoor or outdoor remote sumps tanks. Remote sump applications are commonly used whenever a cooling tower is idle during sub-freezing weather to protect the water in the basin from freezing or for large multi-tower industrial applications. Either application allows the circulating water to gravity drain into a remote sump tank indoors or a large, outdoor concrete basin located underneath the cooling tower.

The water volume provided is the cooling tower portion of the remote sump tank only. The tank should allow for drain down water from external piping and pump suction coverage.

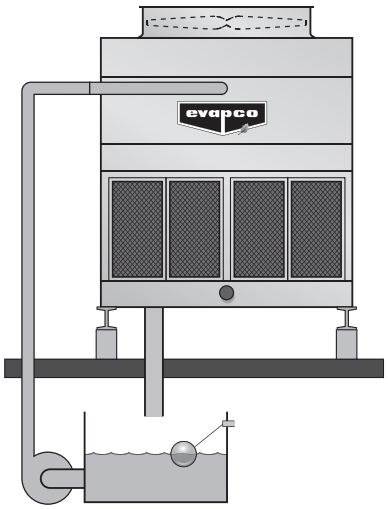

	Box Size	Maximum Drain Down Volume (liters)
1-CELL	4 x 4	322
	4 x 6	492
	4 x 9	738
	4 x 12	1,041
	8.5 x 6	1,022
	8.5 x 8	1,211
	8 x 9	1,495
	8 x11	1,741
	8 x 12	1,987
	8 x 14	2,309
	10 x 12	2,442
	10 x 18	3,710
	12 x 12	2,725
	12 x 14	3,237
	12 x 18	4,126
	12 x 20	4,580
	14 x 24	7,022
	14 x 26	7,893

	Box Size	Maximum Drain Down Volume (liters)
2-CELL	6 x 17	2,044
	8 x 17	2,423
	12 x 9	2,044
	15 x 9	2,423
	17 x 9	2,990
	17 x 11	3,483
	17 x 12	3,975
	17 x 14	4,618
	8 x 18	2,990
	8 x 21	3,483
	8 x 24	3,975
	8 x 28	4,618
	10 x 24	4,883
	10 x 36	7,419
	12 x 24	5,451
	12 x 28	6,473
	12 x 36	8,252
	12 x 40	9,161
	14 x 48	14,044
	14 x 52	15,785
	20 x 12	4,883
	20 x 18	7,419
	24 x 18	8,252
	24 x 20	9,161
	28 x 24	14,044
	28 x 26	15,785
3-CELL	8 x 36	5,962
	8 x 42	6,927
	10 x 36	7,325
	12 x 36	8,176
	12 x 42	9,710
	12 x 54	12,378
	12 x 60	13,741
	14 x 72	21,066
	14 x 78	23,678
	42 x 26	23,678
4-CELL	24 x 24	10,902
	24 x 28	12,946
	24 x 36	16,504
	24 x 40	18,321
	28 x 48	28,088
	28 x 52	31,570
	56 x 26	31,570

Applications

Design
EVAPCO Cooling towers are of heavy-duty construction and designed for long trouble-free operation. Proper equipment selection, installation and maintenance are necessary to ensure full unit performance while maximizing the equipment's service life. Some of the major considerations in the application of a tower are presented below. For additional information, please contact the factory.

Piping
Cooling tower piping should be designed and installed in accordance with generally accepted engineering practices. All piping should be anchored by properly designed hangers and supports with allowance made for possible expansion and contraction. No external loads should be placed upon cooling tower connections, nor should any of the piping supports be anchored to the unit framework.

The piping connection locations shown on the drawings included in this catalog and on the website are standard locations that can be changed. If the piping connection locations shown do not meet the needs of a particular project, contact the factory to determine a viable solution.

Air Circulation
In reviewing the system design and unit location, it is important that enough fresh air is provided to enable proper unit performance. The best location is on an unobstructed roof top or at ground level away from walls and other barriers. Care must be taken when locating towers in wells or enclosures or next to high walls. The potential for recirculation of the hot, moist discharge air back into the fan intake exists. Recirculation raises the wetbulb temperature of the entering air, causing the leaving water temperature to rise above the design conditions. For these cases, the overall unit height should be raised so it is even with the adjacent wall, reducing the chance of recirculation. This can be done by raising the entire unit or adding a discharge hood. For additional information, see the EVAPCO Equipment Layout Manual. Engineering Assistance is also available from the factory to identify potential recirculation problems and recommend solutions, such as re-orienting multi-cell units.

Design Flexibility and Assistance
The large number of EVAPCO AT Cooling towers makes it easy to find a model to meet your design and layout needs. If there is an application for which the standard catalog product line does not work, EVAPCO will make a cooling tower that will fit your requirement. Consult your local EVAPCO Representative or the factory for assistance with Applications, Layout, Accessories or other design needs.

Water Treatment
Proper water treatment is an essential part of the maintenance required for all evaporative cooling equipment. A well designed and consistently implemented water treatment program will help to ensure efficient system operation while maximizing the equipment's service life. A qualified water treatment company should design a site specific water treatment protocol based on equipment (including all metallurgies in the cooling system), location, makeup water quality and usage.

Without proper water treatment, the equipment can be susceptible to scale build-up on its heat exchange surfaces, biological growth in the recirculating water and corrosion of its components. Your site specific water treatment protocol should include procedures for routine operation, startup after a shut-down period, and system lay-up, if applicable.

Passivation Period
If the equipment includes any galvanized components, the initial commissioning and passivation period is a critical time for maximizing the service life of galvanized equipment. Evapco recommends that a site specific water treatment protocol which includes a passivation procedure that details the desired water chemistry and visual inspections during the first six to twelve weeks of operation be used. During this passivation period, recirculating water pH should be maintained above 7.0 and below 8.0 at all times.

Recirculating Water System
The cooling in a tower is accomplished by the evaporation of a portion of the recirculated spray water. As this water evaporates, it leaves behind mineral content and impurities. Therefore, it is important to bleed-off an amount of water proportional to that which is evaporated to prevent the buildup of impurities. If this is not done, the mineral content and/or the corrosive nature of the water will continue to increase. This can ultimately result in heavy scaling or a corrosive condition.

Bleed-off
Evaporative cooling equipment requires a bleed or blow-down line to remove concentrated water from the system. The mineral concentration is monitored by measuring the conductivity of the water. Evapco recommends an automated conductivity controller to maximize the water efficiency of your system. Based on recommendations from your water treatment supplier, the conductivity controller should open and close a bleed valve to maintain the conductivity of the recirculating water.

Control of Biological Contaminants
Evaporative cooling equipment should be inspected regularly to ensure good microbiological control. Inspections should include both monitoring of microbial populations via culturing techniques and visual inspections for evidence of biofouling. Poor microbiological control can result in loss of heat transfer efficiency, increase corrosion potential, and increase the risk of pathogens such as those that can cause risk to health. If excessive microbiological contamination is detected, a more aggressive mechanical cleaning and/or water treatment program should be undertaken.

Structural Steel Support

Models AT 14-2E4 to 314-5O78

Suggested Two I-Beam Arrangement

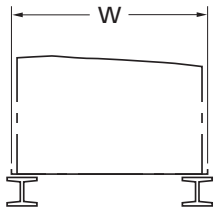

End Elevation

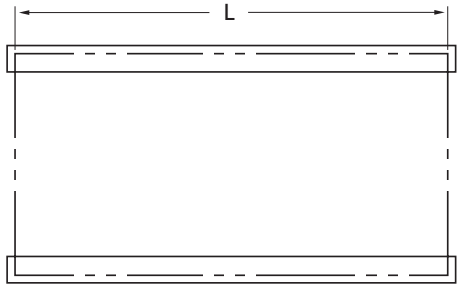

Plan View

Box Sizes 4′ x 4′ through 8′ x 18′

Two I-Beams Required (By Others)

	Box Size	Dimensions (mm)	
		W	L
1-CELL	4 x 4	1,231	1,210
	4 x 6	1,231	1,819
	4 x 9	1,231	2,735
	4 x 12	1,231	3,648
	8.5 x 6	1,826	2,578
	8.5 x 8	2,283	2,578
	8 x 9	2,578	2,731
	8 x 11	2,578	3,188
	8 x 12	2,578	3,651
	8 x 14	2,578	4,261
	10 x 12	2,991	3,651
	10 x 18	2,991	5,486
	12 x 12	3,607	3,651
	12 x 14	3,607	4,261
	12 x 18	3,607	5,486
	12 x 20	3,607	6,096
	14 x 24	4,248	7,239
	14 x 26	4,248	7,845
2-CELL	6 x 17	1,826	5,220
	8 x 17	2,283	5,220
	8 x 18	2,578	5,486

Box Sizes 8′ x 21′ through 14′ x 78′

Two I-Beams Required (By Others)

	Box Size	Dimensions (mm)	
		W	L
2-CELL	8 x 21	2,578	6,401
	8 x 24	2,578	7,366
	8 x 28	2,578	8,585
3-CELL	10 x 24	2,991	7,366
	10 x 36	2,991	11,036
	12 x 24	3,607	7,366
	12 x 28	3,607	8,585
	12 x 36	3,607	11,036
	12 x 40	3,607	12,249
	14 x 48	4,248	14,542
	14 x 52	4,248	15,754
	8 x 36	2,578	11,081
	8 x 42	2,578	12,910
	10 x 36	2,991	11,081
	12 x 36	3,607	11,081
	12 x 42	3,607	12,910
	12 x 54	3,607	16,586
	12 x 60	3,607	18,415
	14 x 72	4,248	21,844
	14 x 78	4,248	23,663

Notes:

Models Listed Above.

1. These are suggested arrangements for preliminary layout purposes. Consult your EVAPCO representative for factory certified steel support drawings.
2. The recommended support for the AT Cooling Tower is structural I-beams located under the outer flanges and running the entire length of the unit. The unit should be elevated to allow access underneath the unit and to the roof below. Mounting holes, 19 mm in diameter, are located in the bottom flanges of the pan to provide for bolting to the structural steel.
3. Beams should be sized in accordance with accepted structural practices. Maximum deflection of beam under unit to be 1/360 of the unit length, not to exceed 13 mm.
4. For these models where two support beams are required, deflection may be calculated by using 55% of the operating weight as a uniform load on each beam.
5. Beams should be level before setting the unit in place. Do not level the unit by shimming between it and the I-beams.
6. Support beams and Anchor bolts are to be furnished by others.
7. Dimensions, weights and data are subject to change without notice. Refer to the factory certified drawings for exact dimensions.
8. For alternate layout arrangements please consult the factory. *NOTE: OPTIONAL BOTTOM CONNECTIONS WILL REQUIRE THE UNIT TO BE ELEVATED TO ALLOW FOR PIPING.*

Structural Steel Support

Models AT 212-2G9 to 428-5O52

Suggested Three I-Beam Arrangement

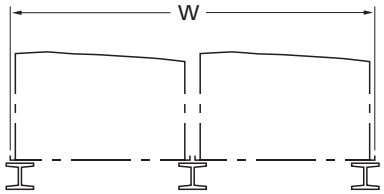

End Elevation

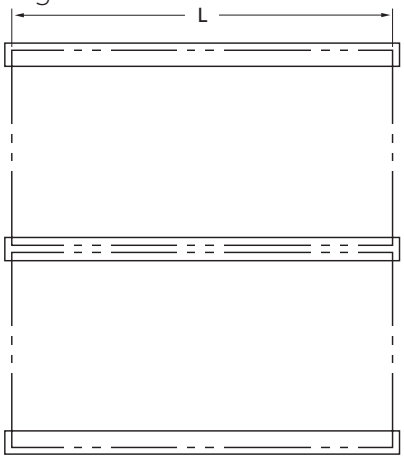

Plan View

Box Sizes 12′ x 9′ through 28′ x 52′

Three I-Beams Required (By Others)

	Box Size	Dimensions (mm)	
		W	L
2-CELL	12 x 9	3,781	2,578
	15 x 9	4,696	2,578
	17 x 9	5,286	2,731
	17 x 11	5,286	3,188
	17 x 12	5,286	3,651
	17 x 14	5,286	4,261
	20 x 12	6,112	3,651
	20 x 18	6,112	5,486
	24 x 18	7,344	5,486
	24 x 20	7,344	6,096
	28 x 24	8,626	7,239
	28 x 26	8,626	7,845
4-CELL	24 x 24	7,344	7,360
	24 x 28	7,344	8,579
	24 x 36	7,344	11,030
	24 x 40	7,344	12,249
	28 x 48	8,626	15,570
	28 x 52	8,626	16,783

Notes:

Models Listed Above.

1. These are suggested arrangements for preliminary layout purposes. Consult your EVAPCO representative for factory certified steel support drawings.
2. The recommended support for the AT Cooling Tower is structural I-beams located under the outer flanges and running the entire length of the unit. The unit should be elevated to allow access underneath the unit and to the roof below. Mounting holes, 19 mm in diameter are located in the bottom flanges of the pan to provide for bolting to the structural steel.
3. Beams should be sized in accordance with accepted structural practices. Maximum deflection of beam under unit to be 1/360 of the unit length, not to exceed 13 mm.
4. For these models only where three support beams are required, deflection may be calculated using 56% of the operating weight on the CENTER BEAM and 22% on each OUTBOARD beam.
5. Beams should be level before setting the unit in place. Do not level the unit by shimming between it and the I-beams.
6. Support beams and Anchor bolts are to be furnished by others.
7. Dimensions, weights and data are subject to change without notice. Refer to the factory certified drawings for exact dimensions.
8. For alternate layout arrangements please consult the factory. NOTE: OPTIONAL BOTTOM CONNECTIONS WILL REQUIRE THE UNIT TO BE ELEVATED TO ALLOW FOR PIPING.

Structural Steel Support

Models AT 342-5K26 to 342-5O26

Suggested Four I-Beam Arrangement

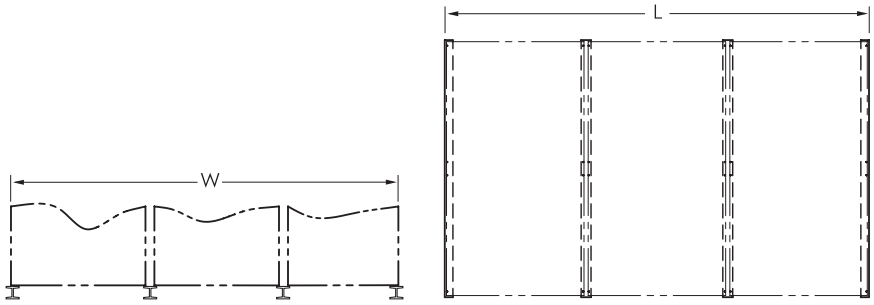

End Elevation

Plan View

Models AT 456-5K26 to 456-5O26

Suggested Five I-Beam Arrangement

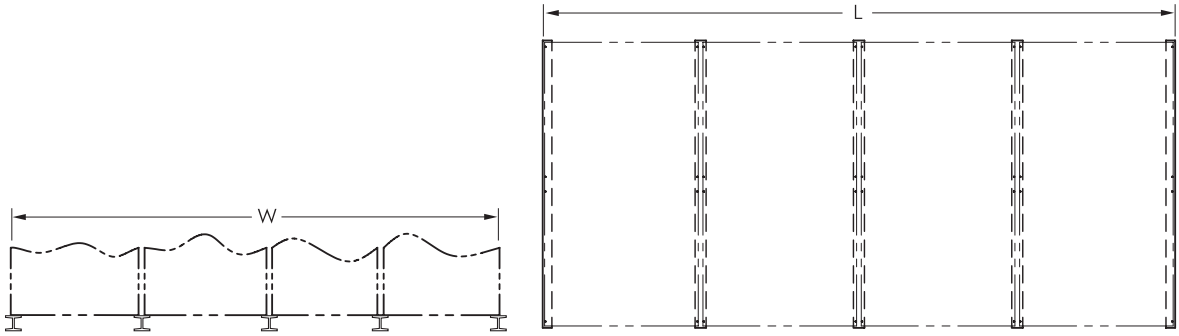

End Elevation

Plan View

Box Size 42' x 26' through 56' x 26'

I-Beams Required (By Others)

Dimensions (mm)		
Box Size	**W**	**L**
42 x 26	13,005	7,845
56 x 26	17,383	7,845

Notes:

Models Listed Above.

1. These are suggested arrangements for preliminary layout purposes. Consult your EVAPCO representative for factory certified steel support drawings.
2. The recommended support for the AT Cooling Tower is structural I-beams located under the outer flanges and running the entire length of the unit. The unit should be elevated to allow access underneath the unit and to the roof below. Mounting holes, 19 mm in diameter are located in the bottom flanges of the pan to provide for bolting to the structural steel.
3. Beams should be sized in accordance with accepted structural practices. Maximum deflection of beam under unit to be 1/360 of the unit length, not to exceed 13 mm.
4. For these models only where four or five support beams are required, deflection may be calculated using 56% of the operating weight on the CENTER BEAMS and 22% on each OUTBOARD beam.
5. Beams should be level before setting the unit in place. Do not level the unit by shimming between it and the I-beams.
6. Support beams and Anchor bolts are to be furnished by others.
7. Dimensions, weights and data are subject to change without notice. Refer to the factory certified drawings for exact dimensions.
8. For alternate layout arrangements please consult the factory. *NOTE: OPTIONAL BOTTOM CONNECTIONS WILL REQUIRE THE UNIT TO BE ELEVATED TO ALLOW FOR PIPING.*

I PRODOTTI EVAPCO SONO FABBRICATI IN TUTTO IL MONDO

EVAPCO, Inc. - Direzione Generale / Centro Ricerche e Sviluppo

P.O. Box 1300 • Westminster, MD 21158 USA
410.756.2600 • marketing@evapco.com • **evapco.com**

Nord America

EVAPCO, Inc.
World Headquarters
Westminster, MD USA
410.756.2600
marketing@evapco.com

EVAPCO East
Taneytown, MD USA

EVAPCO East
Key Building
Taneytown, MD USA

EVAPCO Midwest
Greenup, IL USA
217.923.3431
evapcomw@evapcomw.com

Evapcold Manufacturing
Greenup, IL USA

EVAPCO Newton
Newton, IL USA
618.783.3433
evapcomw@evapcomw.com

EVAPCO West
Madera, CA USA
559.673.2207
contact@evapcowest.com

EVAPCO Alcoil, Inc.
York, PA USA
717.347.7500
info@evapco-alcoil.com

EVAPCO Iowa
Lake View, IA USA

EVAPCO Iowa
Sales & Engineering
Medford, MN USA
507.446.8005
evapcomn@evapcomn.com

EVAPCO LMP ULC
Laval, Quebec, Canada
450.629.9864
info@evapcolmp.ca

EVAPCO Select Technologies, Inc.
Belmont, MI USA
844.785.9506
emarketing@evapcoselect.com

Refrigeration Vessels & Systems Corporation
Bryan, TX USA
979.778.0095
rvs@rvscorp.com

Tower Components, Inc..
Ramseur, NC USA
336.824.2102
mail@towercomponentsinc.com

EvapTech, Inc.
Edwardsville, KS USA
913.322.5165
marketing@evaptech.com

EVAPCO Dry Cooling, Inc.
Bridgewater, NJ USA
908.379.2665
info@evapcodc.com

EVAPCO Dry Cooling, Inc.
Littleton, CO USA
908.895.3236
info@evapcodc.com

EVAPCO Power México S. de R.L. de C.V.
Mexico City, Mexico
(52) 55.8421.9260
info@evapcodc.com

Asia | Pacifico

EVAPCO Asia Pacific Headquarters
Baoshan Industrial Zone Shanghai, P.R. China
(86) 21.6687.7786
marketing@evapcochina.com

EVAPCO (Shanghai) Refrigeration Equipment Co., Ltd.
Baoshan Industrial Zone, Shanghai, P.R. China

EVAPCO (Beijing) Refrigeration Equipment Co., Ltd.
Huairou District, Beijing, P.R. China
(86) 10.6166.7238
marketing@evapcochina.com

EVAPCO Air Cooling Systems (Jiaxing) Company, Ltd.
Jiaxing, Zhejiang,P.R. China
(86) 573.8311.9379
info@evapcochina.com

EVAPCO Australia (Pty.) Ltd.
Riverstone, NSW, Australia
(61) 02.9627.3322
sales@evapco.com.au

EvapTech (Shanghai) Cooling Tower Co., Ltd
Baoshan District, Shanghai, P.R. China.
Tel: (86) 21.6478.0265

EvapTech Asia Pacific Sdn. Bhd.
Puchong, Selangor, Malaysia
(60) 3.8070.7255
marketing-ap@evaptech.com

Europa | Medio Oriente | Africa

EVAPCO Europe
EMENA Headquarters
Tongeren, Belgium
(32) 12.39.50.29
info@evapco.be

EVAPCO Europe BV
Tongeren, Belgium

EVAPCO Europe, S.r.l.
Milan, Italy
(39) 02.939.9041
evapcoeurope@evapco.it

EVAPCO Europe, S.r.l.
Sondrio, Italy

EVAPCO Europe A/S
Aabybro, Denmark
(45) 9824.4999
info@evapco.dk

EVAPCO Europe GmbH
Meerbusch, Germany
(49) 2159.69560
info@evapco.de

EVAPCO Middle East DMCC
Dubai, United Arab Emirates
(971) 56.991.6584
info@evapco.ae

Evap Egypt Engineering Industries Co.
A licensed manufacturer of EVAPCO, Inc.
Nasr City, Cairo, Egypt
(20) 10.054.32.198
evapco@tiba-group.com

EVAPCO S.A. (Pty.) Ltd.
A licensed manufacturer of EVAPCO, Inc.
Isando, South Africa
(27) 11.392.6630
evapco@evapco.co.za

Sud America

EVAPCO Brasil
Equipamentos Industriais Ltda.
Indaiatuba, São Paulo, Brazil
(55) 11.5681.2000
vendas@evapco.com.br

FanTR Technology Resources
Itu, São Paulo, Brazil
(55) 11.4025.1670
fantr@fantr.com

© 2024 EVAPCO Europe

Catalogo 331-I Metrico 0825

Committed to making life easier, more reliable and more sustainable for people everywhere