Mr. GoodTower®

evapco® for LIFE

Operation and Maintenance Instructions

For eco-Air Dry, Adiabatic and Spray
Fluid Coolers, Condensers & CO_2 Gas Coolers

IBC COMPLIANT DESIGNS

U.S. GREEN BUILDING COUNCIL MEMBER

IARW® International Association of Refrigerated Warehouses

Member of iiar® International Institute of Ammonia Refrigeration www.iiar.org

AHRI Air-Conditioning, Heating, and Refrigeration Institute

Table of Contents

2 Introduction

3 Safety Precautions

4 Terminology

4 Receiving

4 Initial Storage and/or Idle Period Recommendations

5 Initial and Seasonal Start-Up and Shut-Down

- 5 General
- 5 Initial and Seasonal Start-Up
- 6 Seasonal Shut-Down
  - 6 Dry, Adiabatic or Spray Fluid Coolers
  - 6 Dry or Adiabatic CO_2 Gas Coolers and Dry, Adiabatic or Spray Condensers

6 Basic eco-Air Series Sequence of Operation

7 Maintenance Instructions

- 7 Finned Coil Cleaning
  - 7 Cleaning Hydraulically
  - 7 Cleaning with Compressed Air
  - 7 Cleaning with Brushes
- 7 Cleaning Fans

8 Adiabatic Pad Pre-Cooling System – If Equipped

- 9 Operation (Adiabatic Pad Pre-Cooling System)
- 9 Maintenance (Adiabatic Pad Pre-Cooling System)

10 Spray Pre-Cooling System – If Equipped

- 11 Operation (Spray Pre-Cooling System)
- 11 Maintenance (Spray Pre-Cooling System)

11 Inlet Water (Adiabatic Pad & Spray Pre-Cooling Systems)

12 Water Quality Guidelines (Adiabatic Pad & Spray Pre-Cooling Systems)

13 Maintenance Checklist

14 Fan System

- 14 Fan Belt Adjustment - Double Stack Product Line Only
- 15 Variable Frequency Drives
  - 15 Sequence of Operation for Multi-Fan Units with a VFD During Peak Load
  - 15 Variable Frequency Drive Lockout Notification

16 Cold Weather Operation

- 16 Unit Layout
- 16 Freeze Protection

17 Troubleshooting

17 Replacement Parts

18 Replacement Part Drawings

- 18 eco-Air Flat Coil Configuration with AC Fan Motors
- 18 eco-Air Flat Coil Configuration with EC Fan Motors
- 19 eco-Air V-Coil Configuration with AC Fan Motors
- 19 eco-Air V-Coil Configuration with EC Fan Motors
- 20 eco-Air Adiabatic Pad Pre-Cooling System Components
- 20 eco-Air Spray Pre-Cooling System with PuRe-JET Components
- 21 eco-Air V-Coil Spray Pre-Cooling System Components
- 21 eco-Air Double Stack Spray Pre-Cooling System Components
- 22 eco-Air Double Stack Adiabatic Cooler with AC Fan Motors
- 22 eco-Air Double Stack Adiabatic Cooler with EC Fan Motors
- 23 eco-Air Double Stack Cooler with AC Fan Motors and Optional Super Low Sound Fans

Introduction

Congratulations on the purchase of your EVAPCO air cooled unit. EVAPCO equipment is constructed of the highest quality materials and designed to provide years of reliable service when properly maintained.

Thoroughly clean road salt, dirt and debris from unit immediately after delivery. Residue left on product surfaces can cause damage that is not covered by any warranty. All new cooling equipment and associated piping should be pre-cleaned and flushed to remove grease, oil, dirt, debris and other suspended solids prior to operation. Any pre-cleaning chemistry should be compatible with the cooling equipment's materials of construction. Alkaline formulations should be avoided for systems which include galvanized materials of construction.

Closed hydronic systems connected to a dry fluid cooler should be pre-cleaned and flushed to remove debris, grease, flash rust, oil, and other suspended solids prior to operation. EVAPCO recommends the use of inhibitor chemistry or inhibited glycol to minimize corrosion and scale during normal operation.

Air cooled equipment is often remotely located and periodic maintenance checks are often overlooked. It is important to establish a regular maintenance program and be sure that the program is followed. This bulletin should be used as a guide to establish a program. A clean and properly serviced unit will provide a long service life and operate at peak efficiency.

This bulletin includes recommended maintenance and maintenance intervals for unit start up, unit operation and unit shutdown. Please note that the maintenance intervals are minimums. Maintenance should be performed more often when operating conditions necessitate.

Become familiar with your air cooled equipment. Refer to the isometric drawings located on pages 17-21 for information on the arrangement of components in your equipment.

If you should require any additional information about the installation, operation or maintenance of this equipment, contact your local EVAPCO representative. You may also visit www.evapco.eu or www.mrgoodtower.eu for more information.

Safety Precautions

Qualified personnel should use proper care, procedures and tools when operating, maintaining or repairing this equipment in order to prevent personal injury and/or property damage. The warnings listed below are to be used as guidelines only.

Air cooled and adiabatic cooling equipment is considered as "Partly completed machinery". "Partly completed machinery" is a totality which almost forms a machinery but in itself cannot fulfill any particular function. The considered cooling equipment is missing the components to safely connect it to the source of energy and motion in a controlled way. The considered cooling equipment is custom made but is not designed to address the specific needs and safety measures for a specific application. Each application requires a unique designed and integrated operational, control and safety strategy that links all components of the installation and eventually a back-up system in a safe and controlled way.

Never operate this equipment without fan screens and access panels properly secured and in place.

During maintenance operations, the worker must use adequate personal protection equipment (PPE - A minimum, but not limited list of PPE are safety shoes, glasses, gloves, respiration protection, helmet) as prescribed by local authorities.

For any exceptional, non routine work to be carried out, protection and adequate safety measures should be considered and a Last Minute Risks Assessment (LMRA) must be made by an authorized person in accordance with safety requirements of the country.

Each coil in this unit ships from the factory with a nitrogen charge on the coils. Verify that the nitrogen charge is still applied before installing unit. Release pressure in each coil before installing heat transfer fluid piping.

An optional factory provided disconnect switch may be located on the unit for each fan motor associated with this equipment. A lock-out / tag-out procedure, integrated with the Process Control System, must be foreseen by the customer. Before performing any type of service or inspection of the unit make certain that all power has been disconnected and locked in the "OFF" position.

The top horizontal surface of any unit is not intended to be used as a working platform. No routine service work is required from this area. For any exceptional, non routine work to be carried out on top of the unit, use ladders, PPE and adequate safety measures against the risk of a fall, in accordance with safety requirements of the country in question.

Sound reducing options are available. In case these options are not taken in consideration, the customer must design the installation to comply with local sound requirements and legislation.

In order to avoid excessive pressure, proper safety valves should be foreseen in the cooling installation. These safety measures are not delivered by Evapco and are the responsibility of the customer/contractor. The application of these safety measures has to be evaluated for the cooling system as a whole and not limited to the partly completed machinery.

Closed hydronic systems connected to either a closed circuit cooler or dry cooler should be pre-cleaned and flushed to remove debris, grease, flash rust, oil, and other suspended solids prior to operation. EVAPCO recommends the use of inhibitor chemistry or inhibited glycol to minimize corrosion and scale during normal operation.

Atmospheric corrosion and corrosion due to the use of corrosive media at the inside/or outside of the coils is forbidden and voids the PED certification.

Every handling that effects the integrity of the pressure ve ssel (example, but not limited to, welding, grinding, drilling, ...) is forbidden and voids the PED certification.

EVAPCO requires that all external piping and fittings be externally supported, the supplied connections are not designed to support external piping or fitting weights. Additional weight to the connections or coil in any way could cause damage to the unit not covered under warranty.

Never use plastic sheets or tarps to protect a unit during stor age. This practice can trap heat inside the unit and could potentially cause damage.

Do not operate the pressure vessel at service conditions outside of the PED nameplate located at the coil connection.

Maximum working temperature of the pressure vessel as mentioned on the PED nameplate exceeds the nominal operating temperature of the unit. Never apply pressure vessel temperatures above 60°C or consult the factory for approval.

Legal periodic controls of the pressure vessel need to be performed according to the legal requirements of the country.

Terminology

Throughout this manual, the terms "Flat Coil," "V-Coil," and "Double Stack" are used. Below is a list of EVAPCO eco-Air product offerings and associated terminology.

eco-Air Series equipment includes the following product models:

- **Dry Products**
  - EAW-FD/EAFWD: Flat Coil Dry Fluid Cooler
  - EAW-VD/EAVWD: V-Coil Dry Fluid Cooler
  - EAW-DD/EADWD: Double Stack Dry Fluid Cooler
  - EAFCD: Flat Coil Dry Condenser
  - EAVCD: V-Coil Dry Condenser
  - EAVGD: V-Coil Dry CO_2 Gas Cooler
- **Dry Products with Air Pre-Cooling Systems**
  - EAW-VA/EAVWA: V-Coil Adiabatic Fluid Cooler
  - EAW-VS/EAVWS: V-Coil Spray Fluid Cooler
  - EAW-DA/EADWA: Double Stack Adiabatic Fluid Cooler
  - EAVCA: V-Coil Adiabatic Condenser
  - EAVCS: V-Coil Spray Condenser
  - EAVGA: V-Coil Adiabatic CO_2 Gas Cooler

Receiving

Carefully inspect all units upon arrival to assure that no damage has occurred during shipment. This includes searching for dirt and debris caused by shipping, as well as inspecting all components and accessories for physical damage. If any units have been damaged during transit, immediately notify the carrier and file a claim with that carrier.

The coils on all EVAPCO eco-Air Series coolers and condensers are shipped from the factory with a low-pressure nitrogen charge. Maintain the nitrogen charge until connecting the unit to the system piping.

Each coil is shipped with a pressure gauge to verify the nitrogen charge in the coil. A coil without the factory nitrogen charge may indicate damage occurred during shipment. In this case, coil(s) should be pressure tested with dry nitrogen gas to assure that it is leak free prior to installation. Please notify your EVAPCO representative before installing any unit that has lost the factory nitrogen charge during shipment. Once the nitrogen charge is verified, release the nitrogen charge by opening the valve located on the outlet coil connection.

Initial Storage and/or Idle Period Recommendations

If the unit will remain inactive for an extended period of time prior to installation it is recommended that the following be performed in addition to all component manufacturers recommended maintenance instructions.

- The fans must be turned by hand at least once every three months. This can be accomplished by tagging and locking out the unit's disconnect, grasping the fan assembly and rotating it several turns.
- If unit remains inactive longer than one month, insulation test motor windings semi-annually.
- See motor manufacturer maintenance and long term storage instructions for more detailed instructions.
- Thoroughly clean road salt, dirt and debris from unit immediately prior to storage or operation. Residue left on product surfaces can cause damage that is not covered by any warranty.

Initial and Seasonal Start-Up and Shut-Down

General

1. Verify that the overall installation reflects the requirements of the installation guidelines found in the EVAPCO Equipment Layout Manual available at www.evapco.eu.
2. Verify all safety interlocks work properly.
3. Examine wiring for loose connections or other obvious damage.
4. For units supplied with an EVAPCO control system, refer to The Controller User's Manual for motor and controls startup. For units not supplied with controls see motor manufacturer's and controls manufacturer's start up recommendations.
5. If the unit is going to remain inactive for an extended period of time, follow all fan motor guidelines for long term storage. Properly ventilated plastic sheets or tarps can be used to protect a unit during storage. See your local EVAPCO representative for additional information on unit storage.

BEFORE BEGINNING ANY MAINTENANCE, BE CERTAIN THAT THE POWER IS TURNED OFF AND THE UNIT IS PROPERLY LOCKED AND TAGGED OUT!

Initial and Seasonal Start-Up

1. Clean and remove any debris, such as leaves and dirt from the coil face, adiabatic pads (if equipped), and fan screens. Flush the adiabatic pads to remove any sediment or dirt. Also clean basket strainers and distribution troughs for units equipped with a PuRe-JET recirculation system.
2. If equipped, the factory set flow setter devices on the adiabatic system piping may need to be adjusted to maintain equal distribution of water flow on both sides of the unit.
3. For Units equipped with a PuRe-JET recirculation system, ensure bleed valves have been preset to 10°C.
4. Fins can be brushed clean with a soft bristle brush or pressurized water, not aimed at an angle, but directly onto the fins to clean accumulated deposits. A fin comb or needle nose pliers can be used to straighten any fins that have become bent. Fins that had been damaged and straightened with a fin comb may not look like new but will function normally if air spaces remain open.
5. Turn the fan(s) by hand to ensure it turns freely without obstructions.
6. Visually inspect the fan blades. Blade clearance should be approximately 1/4" (6 mm) from tip of blade to the fan cowl.
7. For fluid coolers only, fill the heat exchanger coil with the specified heat transfer fluid and purge air from the system before pressurizing, using factory supplied coil vents.

NOTE: Dry fluid coolers should only be used on sealed, pressurized systems. Continual aeration of the heat transfer fluid in an open system can cause corrosion inside the tubes of the cooler leading to premature failure.

For fluid coolers or condensers with optional controls, see EVAPCO Controls Operating Manual for proper start up procedure.

After the unit has been energized, check the following:

1. Verify fans are rotating in proper direction based on arrow sticker affixed to fan housing.
2. Measure voltage and current on all three power leads of fan motors. The current should not exceed the motor nameplate full load amp rating.
3. Start the EVAPCO air pre-cooling system if equipped. For adiabatic units, check for proper pad wetting. For spray units, check to ensure all nozzles are free from debris and have a uniform spray pattern. If the adiabatic pad or spray pre-cooling system is not operating correctly, consult the troubleshooting guide in this manual.

Seasonal Shut-Down

The below steps should be taken when the equipment is shut down for prolonged periods.

DRY, ADIABATIC OR SPRAY FLUID COOLERS

1. Ensure the process is shut down and the system temperature has reached safe shut down condition.
2. If unit is equipped with an adiabatic pad or spray pre-cooling system ensure that all valves are open and system is completely drained.
3. Switch off the fans and power to the unit.
4. Close the isolating valves by others, if equipped.
5. If the cooler will be subjected to sub-zero temperatures and is not filled with a suitable antifreeze, open the air vent and drain connection(s) and drain the heat transfer fluid. Applying a positive pressure to the air vent connection(s) will help ensure that there is no heat transfer fluid retention, which could lead to frost damage.

DRY OR ADIABATIC CO_2 GAS COOLERS AND DRY, ADIABATIC OR SPRAY CONDENSERS

1. Ensure that the refrigeration load is removed.
2. If unit is equipped with an adiabatic pad or spray pre-cooling system ensure that all valves are open and system is completely drained.
3. Switch off the fans and power to the product.

Basic eco-Air Series Sequence of Operation

NOTE: For units with an EVAPCO control system, refer to The Controller User's Manual for detailed sequence of operation.

System Off / No Load

The unit's fans are off. Adiabatic pad or spray pre-cooling systems should be off, if equipped.

System/Condensing Temperature Rises

The fans turn on. For a variable speed controller, the fans are turned on to minimum speed, all fans maintaining the same speed. If the system temperature continues to rise, then the fan speed is increased as required, up to full speed.

If temperatures continue to rise and an adiabatic pad or spray pre-cooling system is equipped, then the water solenoid valve should open and completely wet adiabatic pads, or spray water from nozzles. Fan speeds are increased and decreased as needed after adiabatic pad or spray pre-cooling system is initiated.

NOTE: If the adiabatic or spray unit is equipped with the two-stage operation accessory, two solenoid valves are provided, and the pre-cooling systems are actuated in two stages to reduce overall water consumption.

System/Condensing Temperature Stabilizes

Control the leaving fluid temperature (fluid and CO_2 gas coolers) or condensing pressure (condensers) by modulating the fan speeds with equipped controls system.

System/Condensing Temperature Drops

Decrease the fan speed, as required. If equipped, shut off adiabatic pad or spray pre-cooling system and continue to modulate fan speed.

System Off / No Load

The system fans turns off. The adiabatic pad or spray pre-cooling system should not be used as a means of capacity control, and should not be cycled frequently. Excessive cycling can lead to scale build-up on the pads or coils (in case of spray).

NOTE: Minimum control point for process fluid should never be lower than 6° F (3.5° C) above process fluid freezing temperature.

Maintenance Instructions

Finned Coil Cleaning

It is essential to understand that fouled or dirty fins reduce heat transfer.

1. After operation for a month, check for fouling of the fins. Inspect with a light between the fins to observe the accumulations of dirt and dust.
2. Dry dust can normally be removed by compressed air, a soft brush, or by a suitable industrial vacuum cleaner. Sweep along the fins and under no circumstances across the fins.
3. Moist or sticky blemishes or grease should be removed by means of hot water or steam jet cleaning appliances (against the air direction).
4. Keep the jet of the cleaning appliance at an angle of no more than 15° from vertical position, to avoid bending the fin edges.

Figure 1 – Always Clean Fins in Vertical Direction

CLEANING HYDRAULICALLY

When cleaning the coil hydraulically, EVAPCO recommends using water only. If cleaning products are used ensure that they are compatible with the unit materials of construction. When cleaning with water under pressure, use a power washing device designed for a maximum of 600 psig (41 barg) or less.

Always clean in the vertical direction. Never across the fins, as this will damage the fins. And always from the top down to avoid the water spray entering the fans (this can short circuit the fan motors).

For oily or otherwise difficult to remove dirt, it is possible to add a chemical cleaning agent to the water used in the power washer. Ensure that the cleaning agent is compatible with the materials used in the unit and that it is an environmentally friendly agent.

List of recommended cleaning solutions are shown in Table 1.

STAINLESS STEEL/ALUMINUM COILS	
Trade Name	**Manufacturer**
CL-122	NALCO
CL-127	NALCO
LMC-44	LW Chemical
SoilSolv	DuChem
FS Process Cleaner	Zep
Formula 940	Zep

Table 1 – Acceptable Cleaning Solutions

CLEANING WITH COMPRESSED AIR

When cleaning with compressed air, use a compressor designed for a maximum of 1000 psig (68 barg) or less. For the purpose of removing dirt and debris, please ensure that the air stream is COMPLETELY VERTICAL to the fins as the compressed air stream can damage the fins.

CLEANING WITH BRUSHES

Dry dust and some dirt can be removed with brushes, possibly in
conjunction with compressed air or an industrial vacuum cleaner.

However, ensure that soft brushes are used and when possible all cleaning should be from the top down. **ALWAYS** brush along the fins. **NEVER** across the fins, as this will damage the fins.

Cleaning Fans

ALWAYS ensure that the power to fans has been locked and tagged out prior to cleaning and ensure that the fans cannot be accidentally started during maintenance.

It is recommended to clean the fans either by means of brushes or with compressed air. When cleaning with compressed air, use a compressor designed for a maximum discharge air pressure of 125 psig (8 barg) or less.

Adiabatic Pad Pre-Cooling System – If Equipped

Adiabatic pad pre-cooling systems are supplied with many dry fluid coolers, CO_2 gas coolers, and condensers to enhance the performance of the unit. The figures below show the major components of the adiabatic pad pre-cooling system for the V-Coil and Double Stack configuration models.

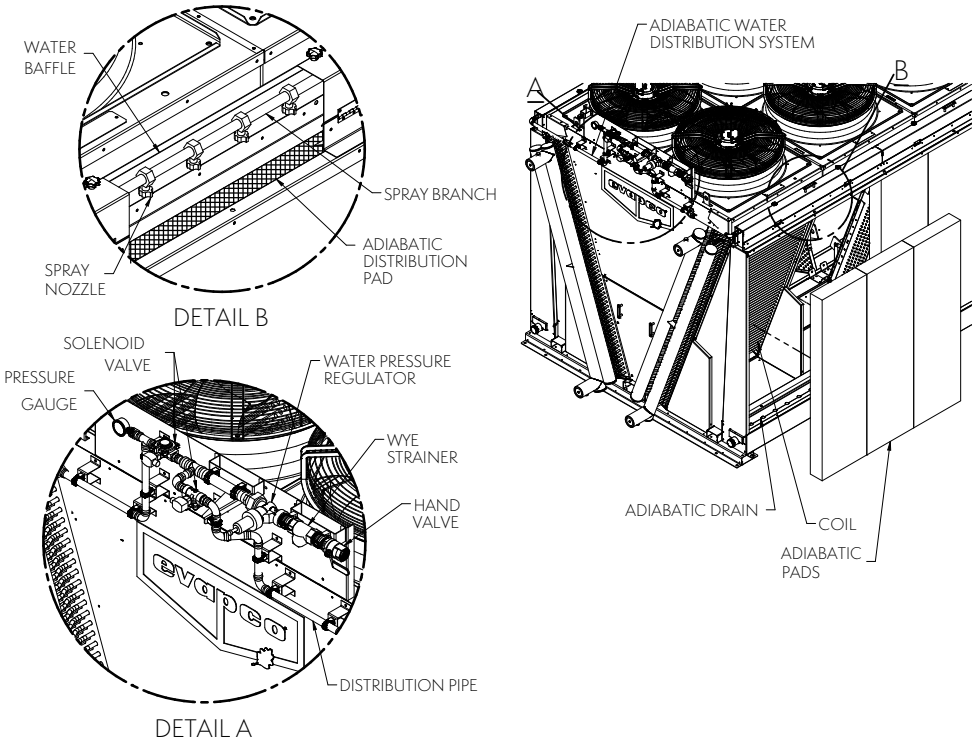

Equipped with PuRe-JET:

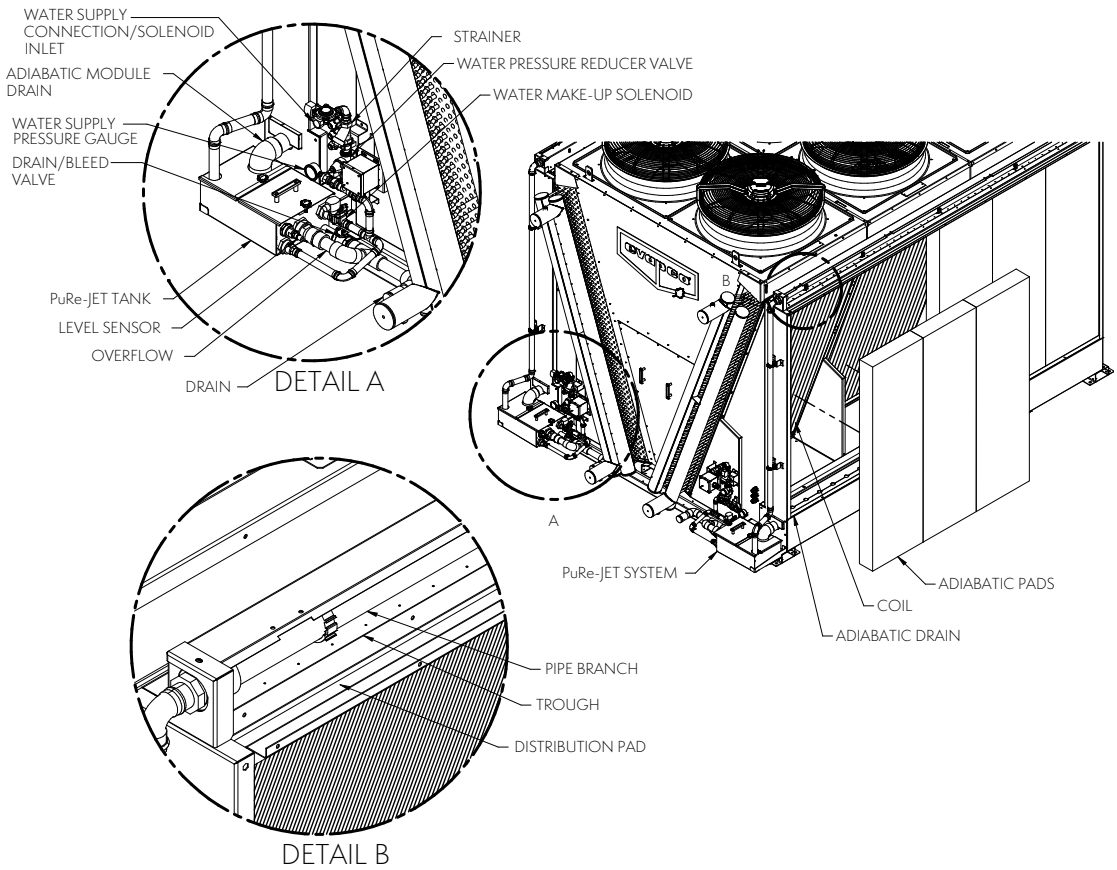

Figure 2 – V-Coil Adiabatic Pad Pre-Cooling System Components

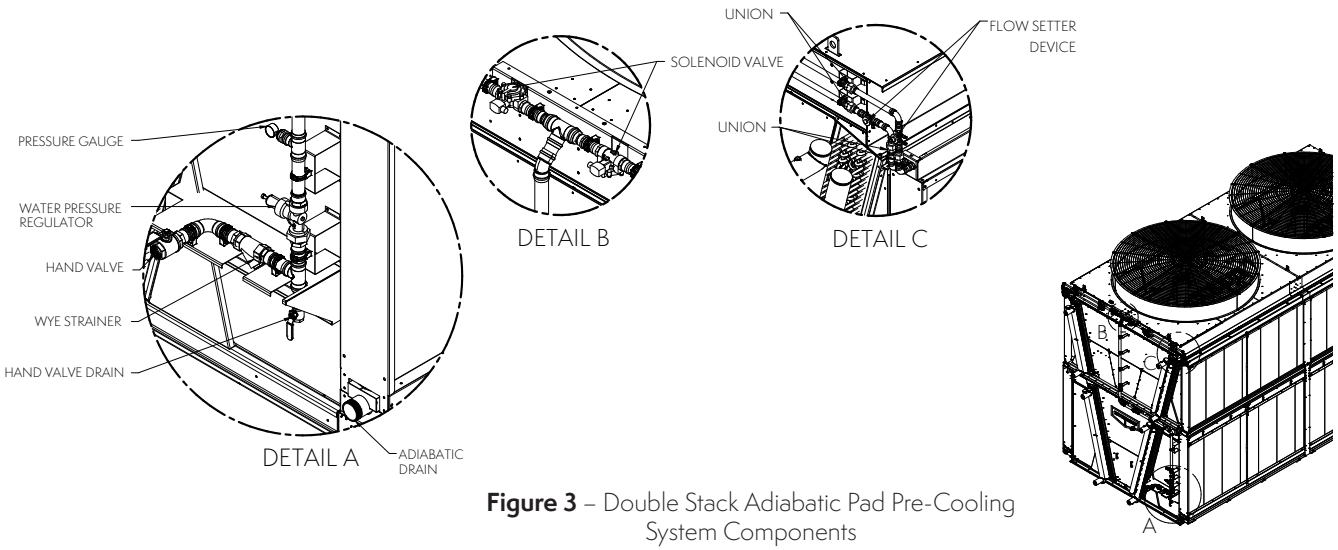

Figure 3 – Double Stack Adiabatic Pad Pre-Cooling System Components

Operation (Adiabatic Pad Pre-Cooling System)

All connecting piping to the unit **MUST** be externally supported. The piping on the unit is not designed to bear additional piping weight.

EVAPCO recommends visually inspecting adiabatic pads and the distribution system regularly during operation and before seasonal startup. When in operation the pads should be completely wetted (there will be a noticeable color difference). If portions of the pad are not wetted, inspect the water distribution system for clogs.

Allow the pads to completely dry once every 24 hours with the fans running.

A water pressure regulator (WPR) is located on the adiabatic distribution system as shown in Figures 2 and 3. For V-Coil models (Figure 2), the WPR must be field adjusted to the water pressure recommended on the unit data sheet/adiabatic pressure nameplate using the provided pressure gauge. The adiabatic pressure nameplate will be located near the WPR. When the adiabatic system is in operation and the WPR is set correctly, a small amount of water will be present in the sloped drain channel. If it becomes necessary to adjust the water flow rate, adjust the WPR until only a small amount of water is in the sloped drain channel but ensure that the adiabatic pads are completely wetted.

For Double Stack models (Figure 3), the WPR must be set to 50 psig (345 kPa) using the provided pressure gauge located after the discharge of the WPR. The water distribution system comes preset from the factory with the correct water flow rate to ensure minimal but even water distribution. When the adiabatic system is in operation and the flow setters are set correctly a small amount of water will be present in the sloped drain channel. If it becomes necessary to adjust the water flow rate, adjust the percentage closed of the flow setter devices using a Phillips screwdriver until only a small amount of water is in the sloped drain channel but ensuring that the adiabatic pads are completely wetted.

For units equipped with a PuRe-JET recirculation system, the bleed valves should be examined to ensure they have been preset to 10°. If further water savings is desired, please consult your local EVAPCO representative.

Maintenance (Adiabatic Pad Pre-Cooling System)

Rinse the adiabatic pads to remove loose sediment or dirt. If further cleaning is required use only a mild and environmentally responsible cleaning agent that is compatible with the unit and pads materials of construction.

To access the distribution system over the adiabatic pads, remove the knobs on the top of the distribution system cover. This allows the distribution cover to hinge down revealing the water distribution system and the distribution pad.

To remove the adiabatic pads, use the following instructions. Installation is the reverse of removal.

1. Remove the bolts on the top of the distribution system cover. This allows the distribution cover to be repositioned revealing the distribution pad.
2. Carefully remove the distribution pad, which is the 2" (50 mm) tall pad positioned between the distribution tray and the large vertical adiabatic pads.
3. Lift the large vertical adiabatic pad to clear the lower support (at the bottom) and remove. It is recommended to start with the center pad per module. This will allow for the pads adjacent to the tube sheets to clear metal brackets attached to the tube sheets.

Ensure the sloped drain channel and outlet connection are free of debris that would impede water flow by removing the adiabatic pads and then removing the slotted sloped drain channel cover.

For units equipped with a PuRe-JET recirculation system, ensure basket strainers are kept clean and free of debris.

The pad material is a bonded cellulose UV resistant material. Refer to local codes and ordinances for disposal methods.

Remove and clean the wye strainer annually to prevent the build up of debris and decreased water flow rate to the adiabatic pads.

Spray Pre-Cooling System – If Equipped

Spray pre-cooling systems are supplied with many dry fluid coolers, CO_2 gas coolers, and condensers to enhance the performance of the unit. The figures below show the major components of the spray pre-cooling system for the V-Coil and Double Stack configuration models

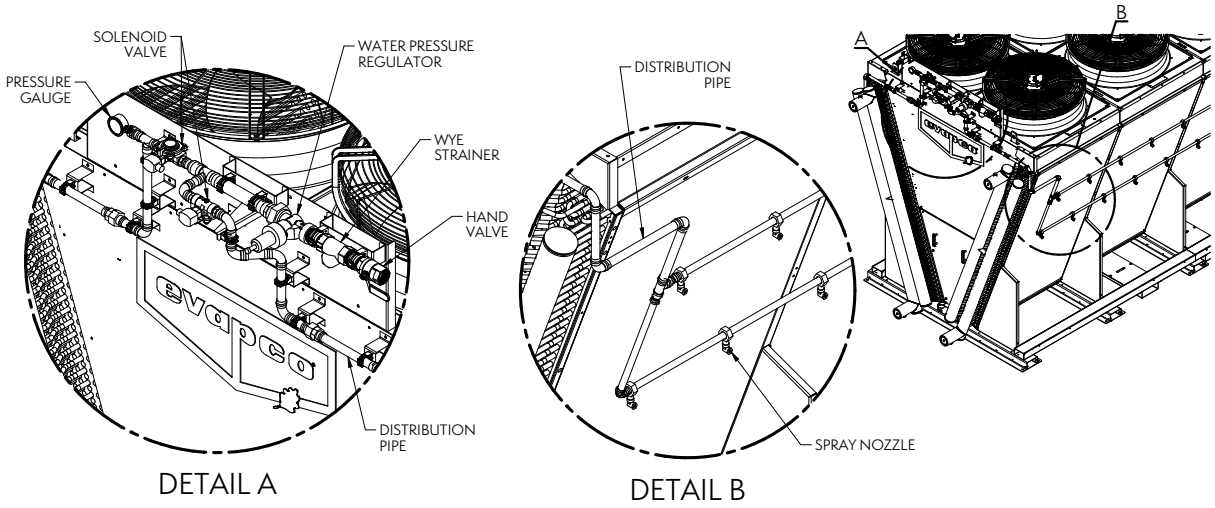

Figure 4 – V-Coil Spray Pre-Cooling System Components

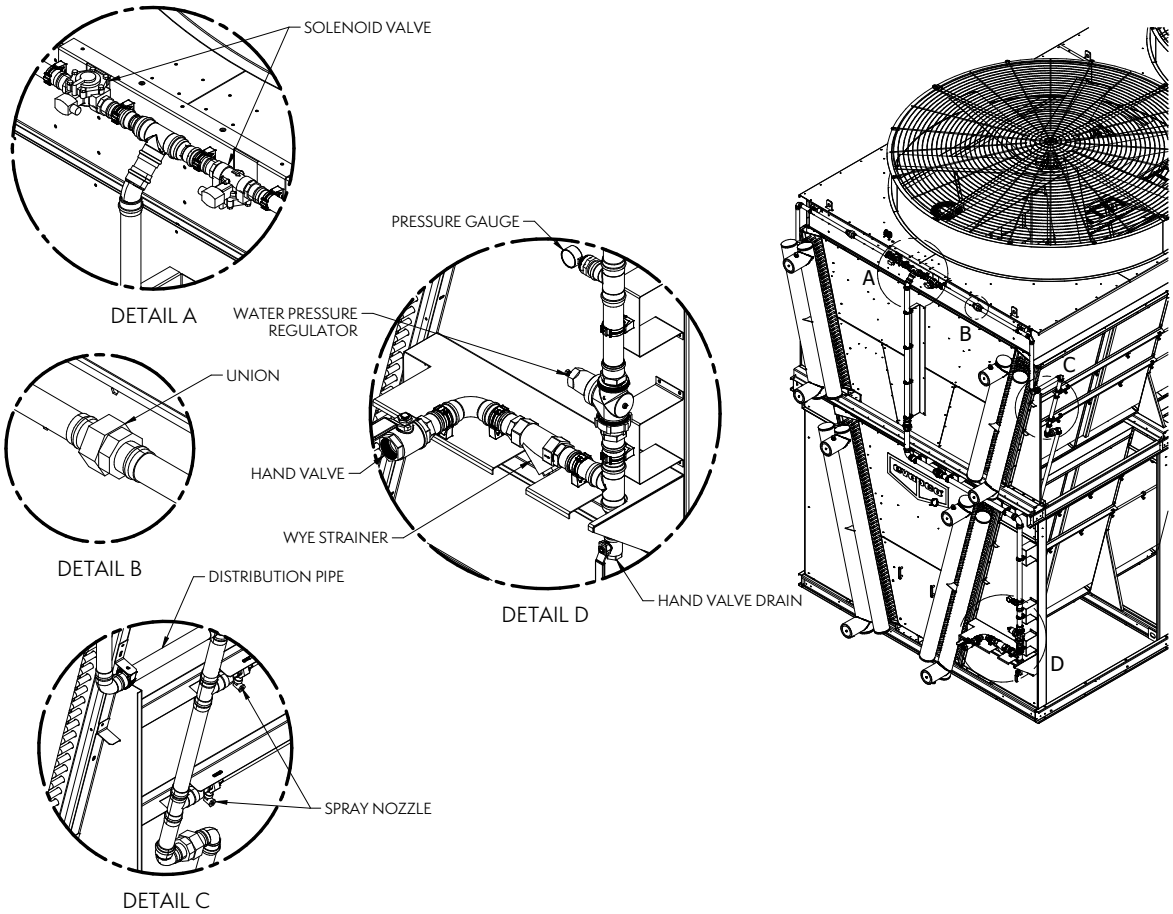

Figure 5 – Double Stack Spray Pre-Cooling System Components

Operation (Spray Pre-Cooling System)

All connecting piping to the unit **MUST** be externally supported. The piping on the unit is not designed to bear additional piping weight.

EVAPCO recommends visually inspecting spray system regularly during operation and before seasonal startup. When in operation the spray nozzles should be spraying outwards and evenly. If any nozzle isn't operating correctly, inspect the water distribution system for clogs.

A water pressure regulator (WPR) is located at the end of each unit as shown in Figures 4 and 5. For units equipped with spray systems, the discharge water pressure must be set once the unit is installed in the field. Refer to the technical data sheet in the factory submittal for the WPR setting required for the submitted design conditions. The provided pressure gauge located at the discharge of the solenoid valve can be used to validate WPR setting. There are no flow setters on the spray system. Inlet water pressure set correctly on the, WPR and a clean water distribution system will ensure proper operation of the spray system.

NOTE: In addition to the outlined water chemistry guidelines, EVAPCO recommends that dry fluid coolers, CO_2 gas coolers and condensers equipped with spray pre-cooling systems limit spray operation to peak ambient and load conditions, about 200 hours a year, to help limit scale build-up, corrosion and to extend the life of the coil.

Maintenance (Spray Pre-Cooling System)

Clean the finned coils using the recommendations outlined under "Cleaning Hydraulically."

Remove the spray nozzles, inspect for debris and clean as necessary.

Remove and clean the wye strainer annually to prevent the build up of debris and decreased water flow rate to the spray system.

Inlet Water (Adiabatic Pad & Spray Pre-Cooling Systems)

The water supply temperature and pressure are typically around +50°F (+10°C) and +50 psig (3.5 barg), respectively for standard city water main lines. The adiabatic pad and spray pre-cooling systems require a minimum water pressure of 50 psig (3.5 barg) at the inlet connection. The adiabatic pad and spray pre-cooling system piping (see Figures 2 - 5) includes a water pressure regulator to enable the use of high pressure supply water, up to 140 psig (10 barg), to be connected. The inlet connection is the highest point on the EVAPCO adiabatic pad and spray pre-cooling systems, allowing for free drainage of water, after the soleniod valve, upon system shutoff. Please refer to the "Freeze Protection" section of this O&M for more information on protecting the adiabatic pad and spray distribution water piping.

Normal municipal and ground water supplies are suitable for use with the adiabatic pad and pre-cooling spray systems. If other water sources, cleaning agents, or treatments are to be used, ensure that they are compatible with all of the eco-Air product line materials of construction including PVC, copper, brass, bonded cellulose, galvanized steel and Type 304L stainless steel.

Water Quality Guidelines (Adiabatic Pad Pre-Cooling Systems)

EVAPCO recommends the below outlined water chemistry guidelines applicable to **ADIABATIC PAD** pre-cooling systems for dry fluid coolers, CO_2 gas coolers, and condensers . The water quality guidelines shown below apply to the water which is distributed over the adiabatic pads. These guidelines are recommended to extend pad life and limit scale build up on the pads.

Property	Adiabatic Pad Pre-Cooling System
pH	6.0 - 9.0
Conductivity (mhos/cm)	<1,500
Alkalinity as $CaCO_3$ (ppm)	<250
Calcium Hardness as $CaCO_3$ (ppm)	<300
Alkalinity + Calcium	<500
Chloride as Cl (ppm)	<250
Sulfate (ppm)	<250
Chloride + Sulfate	<400
Silica as SiO_2 (ppm)	<150

Table 2 – Recommended Water Chemistry Guidelines for Inlet Water to Adiabatic Pad Pre-Cooling Systems

Water Quality Guidelines (Spray Pre-Cooling Systems)

EVAPCO recommends the below outlined water chemistry guidelines applicable to **SPRAY** pre-cooling systems for dry fluid coolers, CO_2 gas coolers, and condensers. The water quality guidelines shown below apply to the water which passes through the spray pre-cooling system. Although the spray nozzles spray water away from the coils, the coils and structure of the unit will get wet when the spray pre-cooling system is on. Thus, the water quality guidelines shown below are recommended to limit scale build-up and corrosion on the finned tube bundles.

In addition to the water quality guidelines shown below, EVAPCO recommends designing the system for a maximum of 200 hours of spray operation per year to help limit the possibility for scale build-up and corrosion.

Property	Spray Pre-Cooling System	
	Scenario 1	Scenario 2
pH	6.0 - 8.5	6.0 - 8.5
Conductivity (mhos/cm)	<1,500	<1,000
Alkalinity as $CaCO_3$ (ppm)	<250	<200
Calcium Hardness as $CaCO_3$ (ppm)	<350	<250
Alkalinity + Calcium	<550	<400
Chloride as Cl (ppm)	<175	<150
Sulfate (ppm)	<225	<200
Chloride + Sulfate	<350	<300
Silica as SiO_2 (ppm)	<150	<150

Table 3 – Recommended Water Chemistry Guidelines for Inlet Water to Spray Pre-Cooling Systems

***Scenario 1** applies when the entering **Process Fluid or Superheated Refrigerant** temperature is equal to or less than 120°F (49°C).

***Scenario 2** applies when the entering **Process Fluid or Superheated Refrigerant** temperature is above 120°F (49°C).

*For Process Fluid and Superheated Refrigerant temperatures in excess of 212°F (100°C), please consult with EVAPCO.

"Process Fluid" or "Superheated Refrigerant" is the fluid that is circulated and cooled inside the coils. The water chemistry guidelines outlined for Scenario 2 are more stringent than Scenario 1 because entering process fluid or refrigerant temperatures above 120°F (49°C) can accelerate the rate of scale formation and corrosion on the finned coil bundles when the spray pre-cooling system is operational.

If the water chemistry guidelines are not followed or if the spray pre-cooling system is run for prolonged periods of time (>200 hours per year) or cycled excessively, excessive scale buildup is possible and is not covered under unit warranty.

MAINTENANCE CHECKLIST

PROCEDURE	JAN	FEB	MAR	APR	MAY	JUN	JUL	AUG	SEP	OCT	NOV	DEC
1. Check fins for clogging or debris – **monthly**												
2. Check unit for damage – **quarterly**												
3. Check unit for leaks – **quarterly**												
4. Clean the coil(s) – **semi-annually**												
5. Check cooler coil connections for tightness – **annually**												
6. Check the fan blades for cracks, missing balancing weights, and vibration – **quarterly**												
7. Examine all wiring for signs of loose connections or obvious damage – **quarterly**												
8. Lubricate fan shaft bearings - **Every 1000 hours of operation (or 3 months)***												
9. Check belt tension and adjust – **monthly***												
10. Sliding motor base - Inspect and grease* – **annually or as needed**												
11. Check unit control sequence and assure proper operation – **quarterly**												
12. Inspect and clean unit surfaces – **annually**												
a. Galvanized: scrape blemishes and coat with ZRC												
b. Stainless: clean and polish with a stainless steel cleaner												

* These procedures are only for the Double Stack product line.

Adiabatic & Spray Units (During Operation):	JAN	FEB	MAR	APR	MAY	JUN	JUL	AUG	SEP	OCT	NOV	DEC
1. Check adiabatic pad and water distribution system for damage or incorrect pad wetting – **monthly**												
2. Confirm water piping integrity including flow setter adjustment. The flow setter can be used to adjust the amount of water distributed to the adiabatic pads. Check to ensure holes are unclogged – **bi-monthly**												
3. Check spray nozzles and water distribution system for damage and uniform spray pattern – **monthly**												
4. Remove and clean wye strainer – **annually**												

Fan System

Most fan motors are supplied with permanently lubricated sealed bearings and special moisture protection on the bearings, shaft and windings. Please refer to the original manufacturer's instructions. The Double Stack units with AC motors require their fan shaft bearings to be lubricated. Be sure to verify any instructions for special motors that have been ordered. **A motor data sheet and specific motor instructions are shipped with each unit.**

Please refer to The Controller User's Manual for details about control systems.

Fan Belt Adjustment - Double Stack Product Line Only

The fan belt tension should be checked at start up and again after the first 24 hours of operation to correct for any initial stretch. To properly adjust the belt tension, position the fan motor so that the fan belt will deflect approximately 1/2" (13 mm) when moderate pressure is applied midway between the sheaves. Figure 6 and Figure 7 show two ways to measure this deflection. Belt tension should be checked on a monthly basis. A properly tensioned belt will not "chirp" or "squeal" when the fan motor is started.

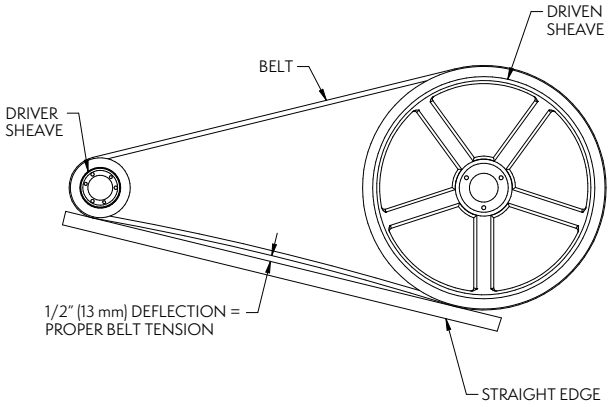

Figure 6 — Method 1, Measuring Fan Belt Deflection

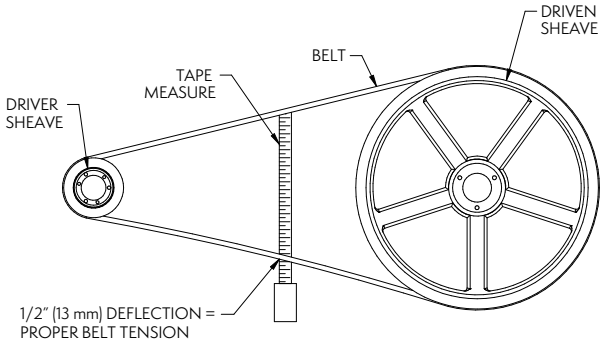

Figure 7 — Method 2, Measuring Fan Belt Deflection

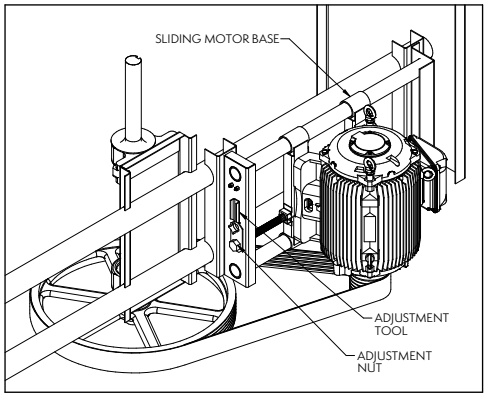

Figure 8 — Internally Mounted Motor, Double Stack

On induced draft belt driven units with internally mounted motors, a motor adjustment tool is provided. The tool will be found on the adjustment nut. To use, place the hex end over the adjustment nut. Tension the belt by turning the nut in the appropriate direction. When the belts are properly tensioned, tighten the lock nut.

Variable Frequency Drives

The use of a variable frequency drive (VFD) provides the most precise method of capacity control. A VFD is a device that converts a fixed AC voltage and frequency and changes it into an AC adjustable voltage and frequency used to control the speed of an AC motor. By adjusting the voltage and frequency, the AC induction motor can operate at many different speeds.

The use of VFD technology can also benefit the life of the mechanical components with fewer and smoother motor starts and built in motor diagnostics. VFD technology has a particular benefit on evaporative cooling units operating in cold climates where airflow can be modulated to minimize icing and reversed at low speed for de-icing cycles. Applications using a VFD for capacity control must also use an inverter duty motor built in compliance with IEC standard. This is a standard option from EVAPCO.

The type of motor, manufacturer of the VFD, motor lead lengths (between the motor and the VFD), conduit runs and grounding can dramatically affect the response and life of the motor. Select a high quality VFD that is compatible with the fan motor(s) in the EVAPCO unit(s). Many variables in the VFD configuration and installation can affect motor and VFD performance. Two particularly important parameters to consider when choosing and installing a VFD are switching frequency and the distance between the motor and VFD, often referred to as lead length. Consult the VFD manufacturer's recommendations for proper installation and configuration. The motor lead length restrictions can vary with the vendor. Regardless of motor supplier, minimizing lead length between the motor and drive is good practice. The motor lead length restrictions may vary with the motor vendor.

SEQUENCE OF OPERATION FOR MULTI-FAN UNITS WITH A VFD DURING PEAK LOAD

1. The VFD should all be synchronized to speed up and slow down uniformly.
2. The VFD needs to have a preset shutoff to prevent water temperatures from becoming too cold and to prevent the drive from trying to turn the fan at near zero speed.
3. Operating below 25% of motor speed achieves very little return in fan energy savings and capacity control. Unless otherwise stated in your factory submittal, 25% is the lowest recommended fan speed.

VARIABLE FREQUENCY DRIVE LOCKOUT NOTIFICATION

⚠ Qualified personnel should use proper care, procedures and tools when maintaining the fan/drive system in order to prevent personal injury and/or property damage.

⚠ Identify and lockout harmful resonant frequencies.

A variable frequency drive (VFD) fan system, unlike traditional fixed-speed systems, is designed to operate between 25% (12.5Hz) and 100% (50Hz) speeds, which creates an opportunity for operation where resonant frequencies exist. Sustained operation at resonant frequencies may lead to excessive vibration, fatigue of structural components, and/or drive system noise and failure. Owners and operators must anticipate the existence of resonant frequencies and lock out frequencies during startup and commissioning in order to prevent drive system operational problems and structural damage. As a part of the normal start-up and commission processes, resonant frequencies should be identified and locked out in the VFD's software.

The unit's supporting structure, external piping, and accessories contribute to the overall harmonic make-up and stiffness of the system. The choice of VFD will also have a significant influence on how the system behaves. Consequently, not all resonant frequencies can be determined in advance at the manufacturer's factory during final inspection and testing. Relevant resonant frequencies (if they occur) can only be identified accurately after the unit installation in the system.

To check for resonant frequencies in the field, a run-up and run-down test must be performed. Additionally, VFD carrier frequencies should be adjusted to best align the VFD with the electrical system. Refer to your drive's start-up procedures for additional information and instruction.

The procedure of checking for resonant frequencies requires stepping through the VFD's operating range at (2) Hz intervals from the lowest operating frequency to full speed. At each step, pause long enough for the fan to reach steady-state. Note changes in unit vibration during this time. Repeat from full speed to minimum speed. Should vibration-inducing frequencies exist, the run-up and run-down test will isolate the resonant frequencies which then must then be locked out in the VFD programming.

For more details on the use of variable frequency drives, please reference the "Variable Frequency Drives" document located under technical references, in the document library on www.evapco.eu.

Cold Weather Operation

EVAPCO eco-Air Series air cooled equipment is well suited to operate in cold weather conditions. The lack of required water makes air cooled equipment ideal for low ambient conditions. When the air cooled unit is going to be used during cold weather conditions, several items need to be considered including unit layout, adiabatic pad or spray system water distribution piping (if equipped), and unit heat transfer coils.

Unit Layout

Adequate, unobstructed air flow must be provided for both the intake and discharge from the unit. For additional information on unit layout, please refer to EVAPCO's Equipment Layout Manual Bulletin #320-E Metric.

Freeze Protection

EVAPCO is not responsible for ensuring that the product is adequately protected against the heat transfer fluid freezing. If the product has occasion to operate in close to or sub-freezing temperatures then either the heat transfer fluid should be dosed with an adequate anti-freeze additive or provision has to be made to either manually or automatically drain the fluid from the cooler.

NOTE: Opening the air vent and drain connections as a means to fully drain the fluid from the dry cooler is not sufficient to fully empty all the fluid and thus prevent freeze damage. In particular for large dry coolers, air pressure assisted drainage is required.

The sequence of control for a unit operating at low ambient conditions is much the same as a cooler or condenser operating under summer conditions provided that the ambient temperature is above freezing. When the ambient temperatures are below freezing, additional precautions must be taken to avoid the potential for damaging ice formation.

It is very important to maintain close control of the cooler or condenser during winter operation. EVAPCO recommends that the leaving heat transfer fluid temperature NEVER be less than 6°F (3.5°C) above the fluids freezing temperature.

If the adiabatic (optional) fluid and gas cooler or air cooled condenser is to be located in an area that experiences ice storms and freezing conditions EVAPCO recommends the removal and dry storage of the adiabatic pads (if equipped).

NOTE: Heat tracing all adiabatic and spray water piping upstream and including the solenoid valve is required, unless the incoming water supply lines are drained during low ambient conditions and all valves are left open (recommended). Adiabatic pad and spray pre-cooling systems are not intended to be operated in low ambient conditions. For units equipped with a PuRe-JET recirculation system, ensure the bleed valves are open to allow for gravity draining of the recirculation tanks.

Troubleshooting

Problem	Possible Cause	Remedy
Overamping Fan Motors	Electrical issue	1. Check voltage across all three legs of the motor. 2. Verify that the motor is wired per the wiring diagram, and connections are tight. 3. Refer to EVAPCO's Controller User's Manual for further details.
	Fan rotation	Verify that the fan is rotating in the correct direction using visible arrow sticker on fan cowl. If not, switch the leads so it runs correctly.
	Mechanical failure	If fan motor does not turn freely by hand, replace fan/motor assembly.
	Motor running single- phase	Stop motor and attempt to start it. Motor will not start again if single phased. Check wiring, controls and motor.
Unusual Motor Noise	Motor leads connected incorrectly	Check motor connections against wiring diagram on motor.
	Electrical unbalance	Check voltage and current of all three lines. Correct if required.
	Fan hitting cowl	Replace fan/motor or assembly.
	Defective motor	Replace fan motor or assembly.
Capacity Not Reached	Insufficient fluid flow	Check piping system and components.
	Heat transfer fluid change	Compare with design fluid and adjust if required
	De-energized fans	1. Verify motor has power. 2. If motor has power and is still de-energized, replace fan/motor assembly.
	Adiabatic pads not wetted	Check for complete wetting of pads 1. If pads are only partially wetted, clean out water distribution pipe and check distribution holes for clogs. 2. If pads have excessive scale they will need to be replaced.
	Fouled heat Transfer surface	Carefully clean fins, see page 7 for more details.
Improper Water Distribution for Adiabatic Pad or Spray Pre-Cooling System	Spray nozzles not spraying water uniformly	1. Check for clogged/fouled nozzles or distribution piping 2. Check pressure gauge to ensure correct incoming water pressure, pressure requirements can be verified on the technical data sheet of the submittal. 3. Check PuRe-JET devices.
	Uneven water distribution for adiabatic pad and pre-cooling system	
Fans Not Rotating	Damaged or unbalanced fan blade or motor	Replace fan/motor assembly.
Vibration	Loosely attached fan/motor assembly	Tighten fan/ motor assembly.
	Unbalanced fan	(AC equipped units only) balance fan blade using spacers.

Table 4 — Troubleshooting Guidelines for eco-Air Units

Replacement Parts

EVAPCO has replacement parts available for immediate shipment. Most orders ship within 24 hours from time of order!

The following pages contain exploded view drawings of all current EVAPCO eco-Air closed fluid coolers and condensers. Please use these drawings to help identify the major parts of your unit. To order replacement parts, please contact your local EVAPCO representative or Mr. GoodTower Service Center. The EVAPCO representative contact information is located on the unit's nameplate or can be found by visiting either www.evapco.eu or www.mrgoodtower.eu.

Additionally, your local EVAPCO representative or Mr. GoodTower Service Center can provide FREE unit inspections to help ensure your equipment operates at peak performance regardless of the original manufacturer!

Replacement Part Drawings

eco-Air Flat Coil Configuration with AC Fan Motors

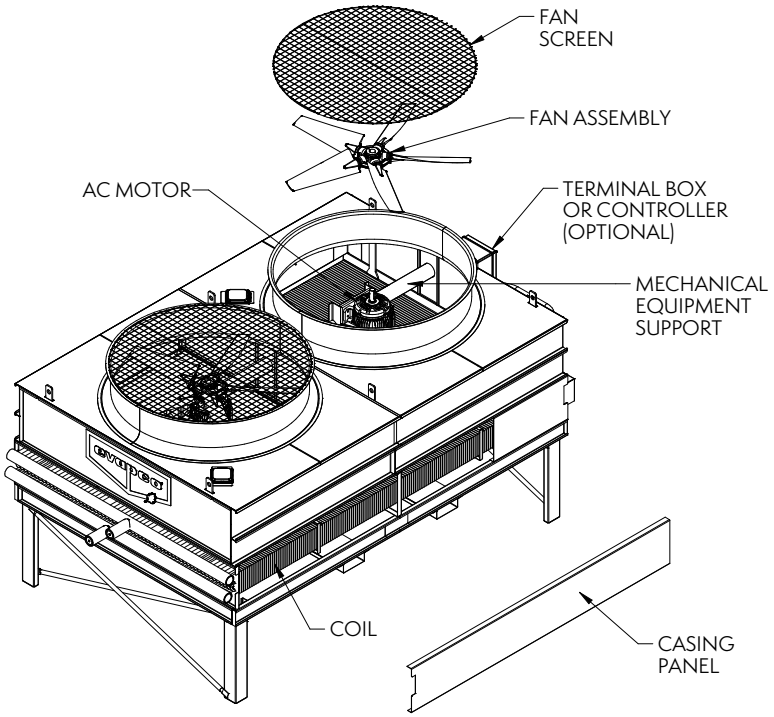

eco-Air Flat Coil Configuration with EC Fan Motors

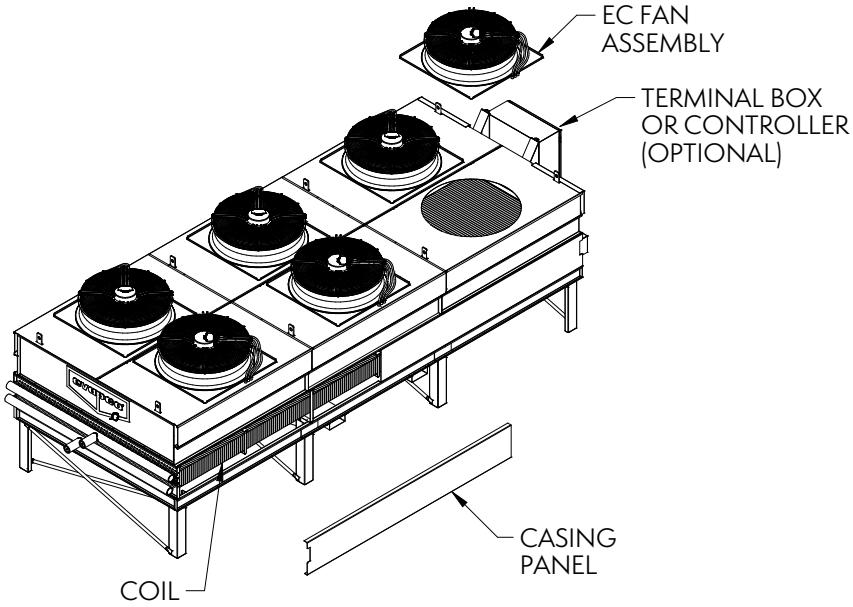

eco-Air V-Coil Configuration with AC Fan Motors

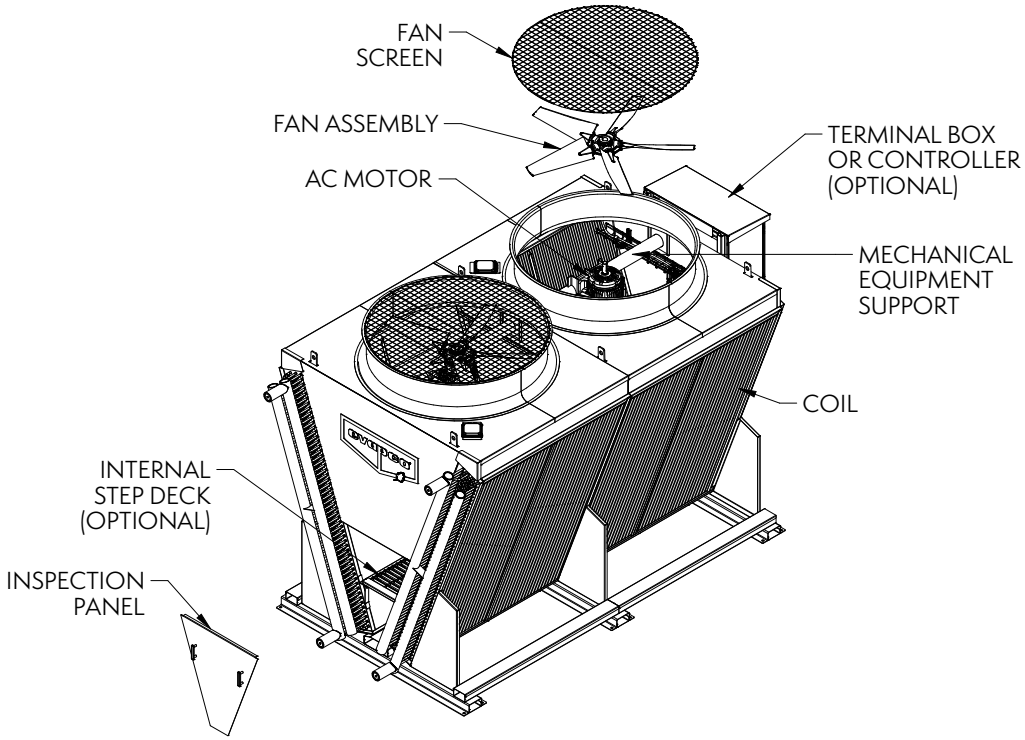

eco-Air V-Coil Configuration with EC Fan Motors

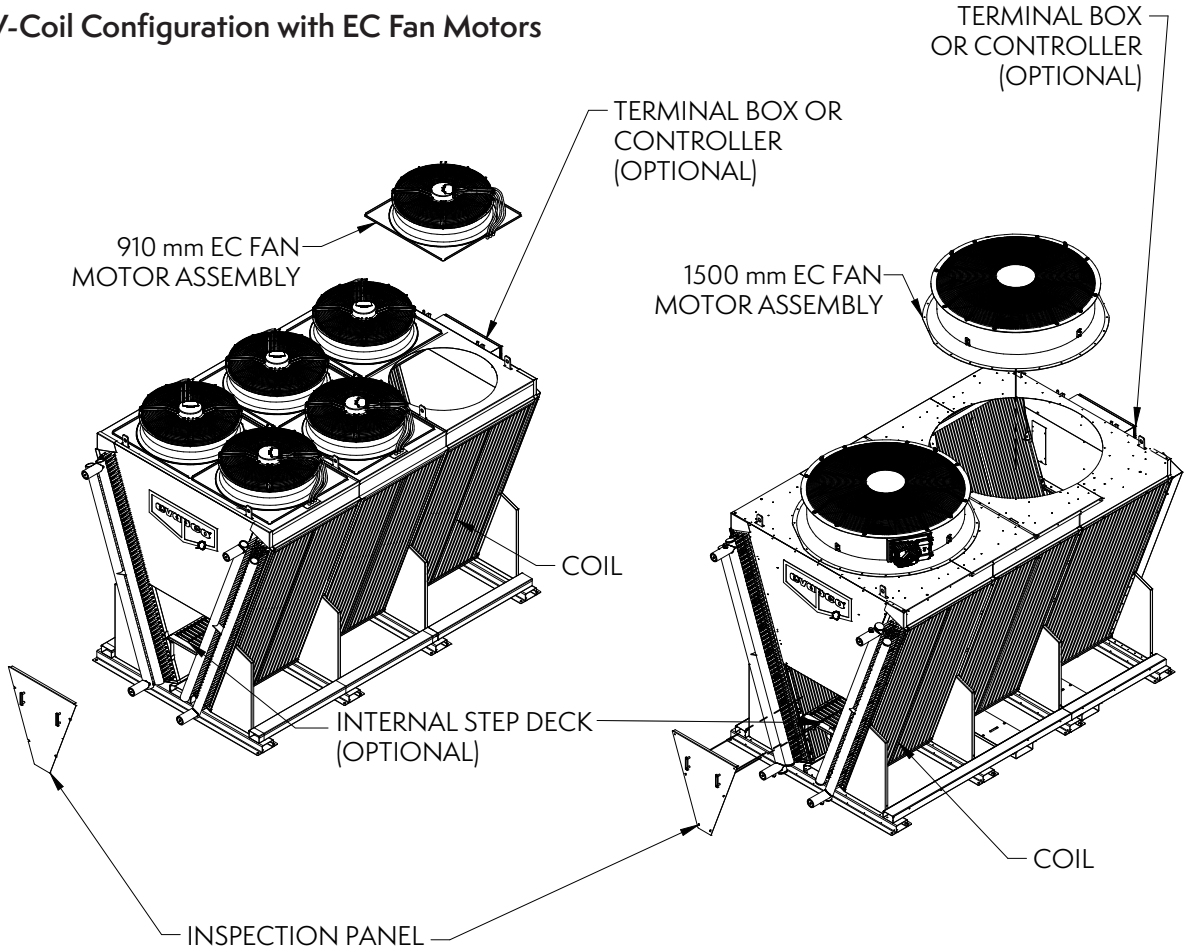

eco-Air V-Coil Adiabatic Pad Pre-Cooling System Components

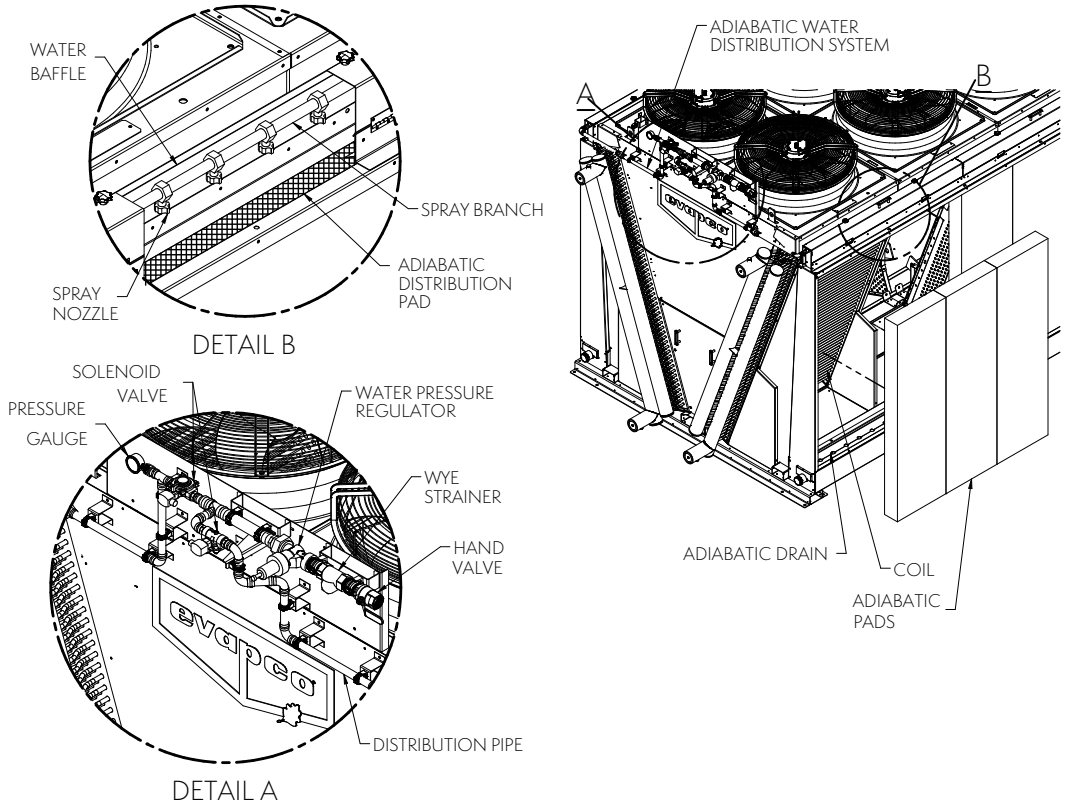

eco-Air V-Coil Adiabatic Pad Pre-Cooling System with PuRe-JET Components

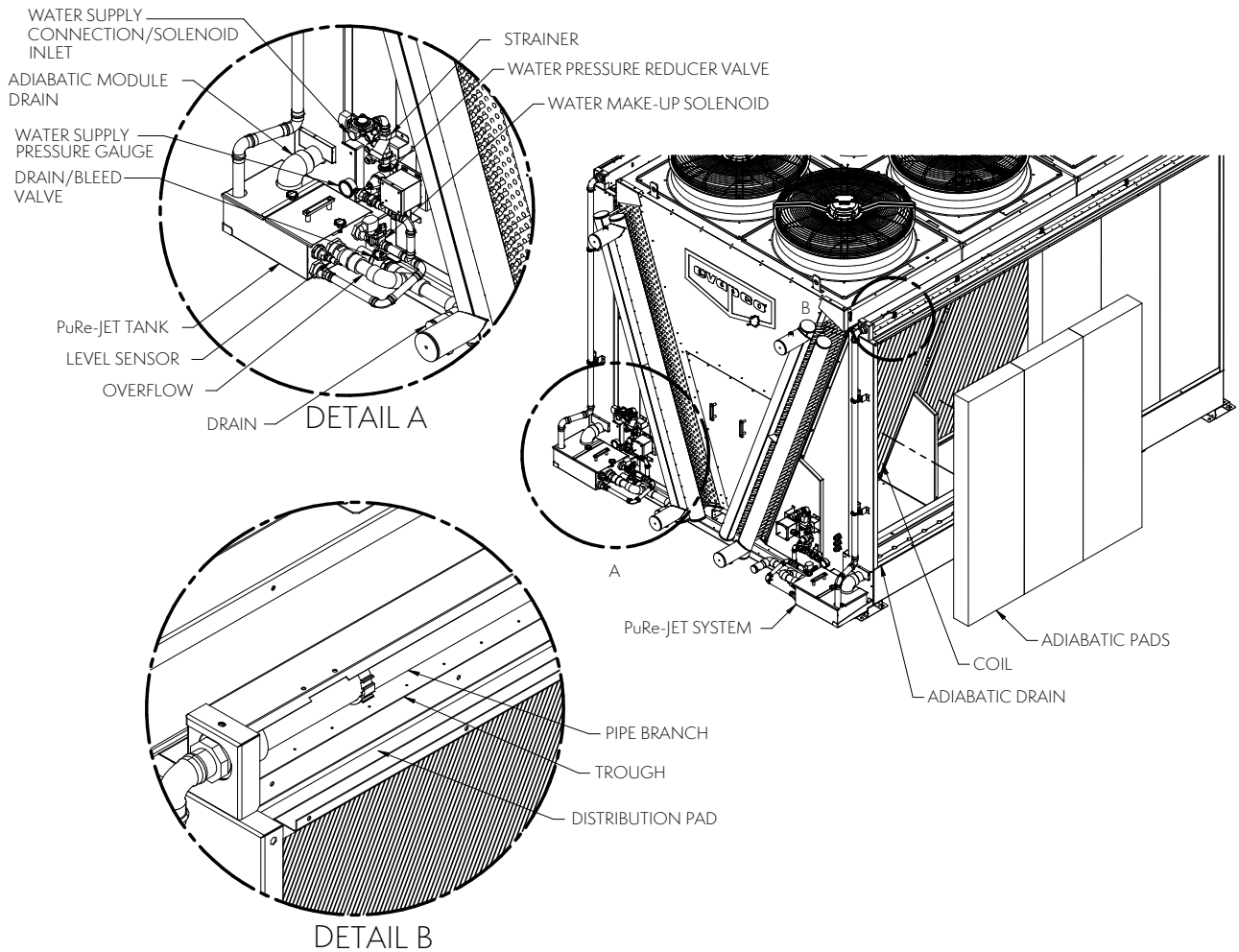

eco-Air V-Coil Spray Pre-Cooling System Components

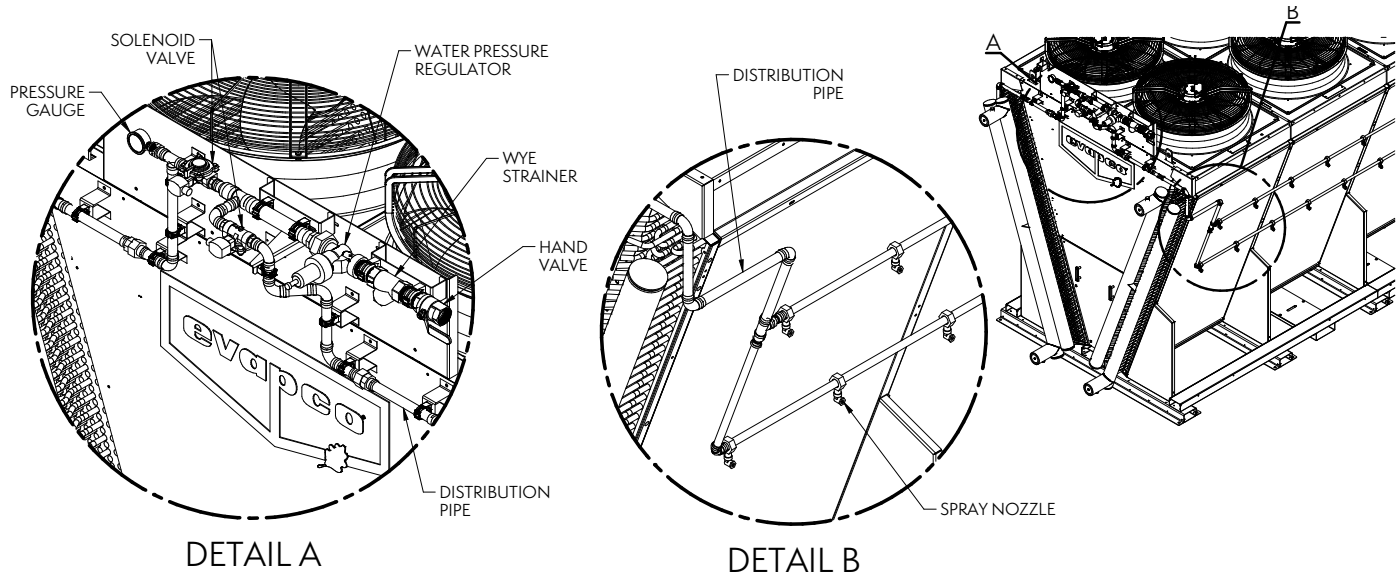

eco-Air Double Stack Spray Pre-Cooling System Components

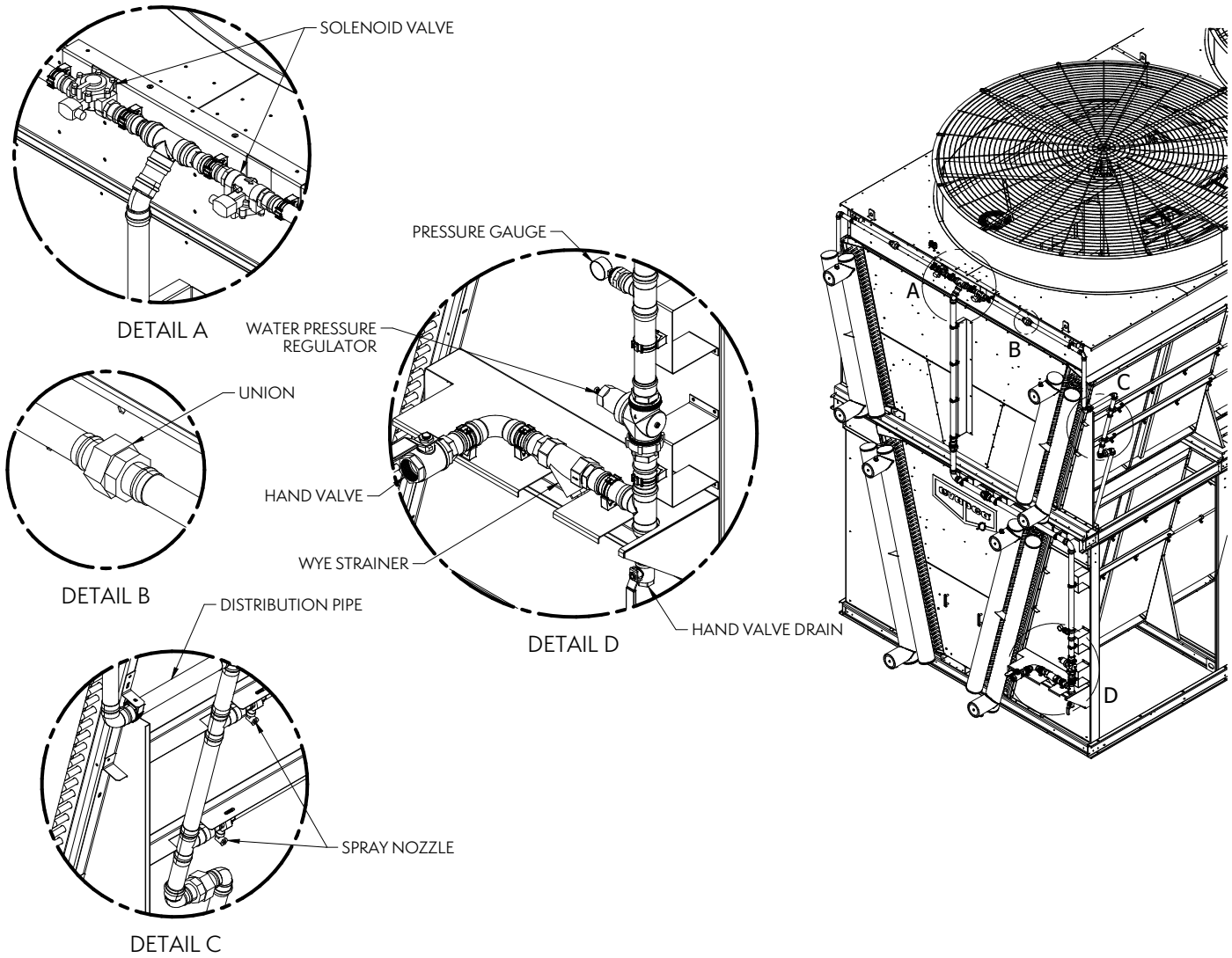

eco-Air Double Stack Adiabatic Cooler with AC Fan Motors

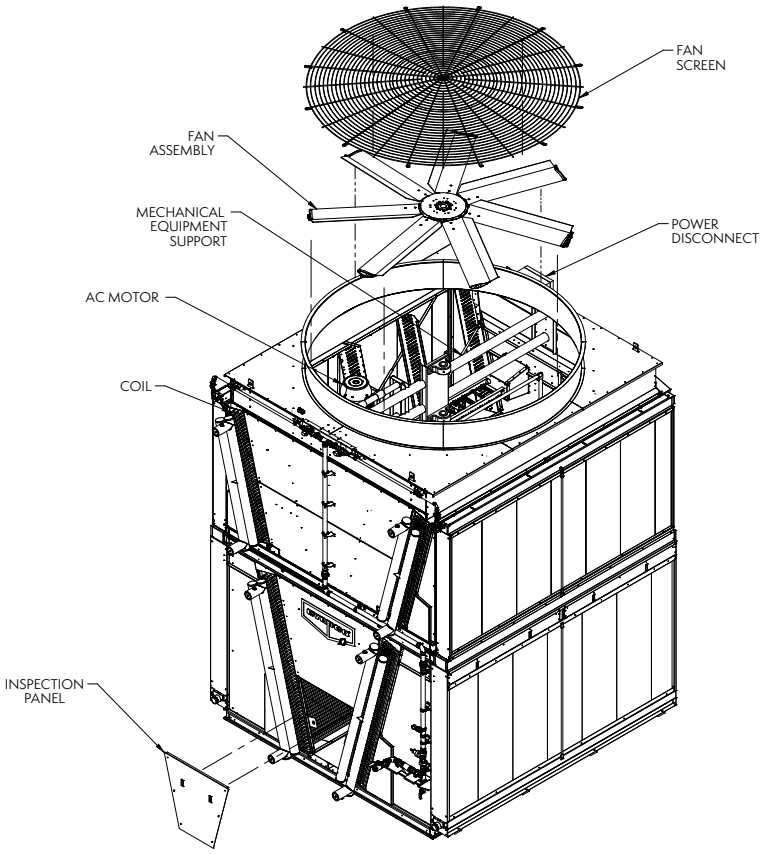

eco-Air Double Stack Adiabatic Cooler with EC Fan Motors

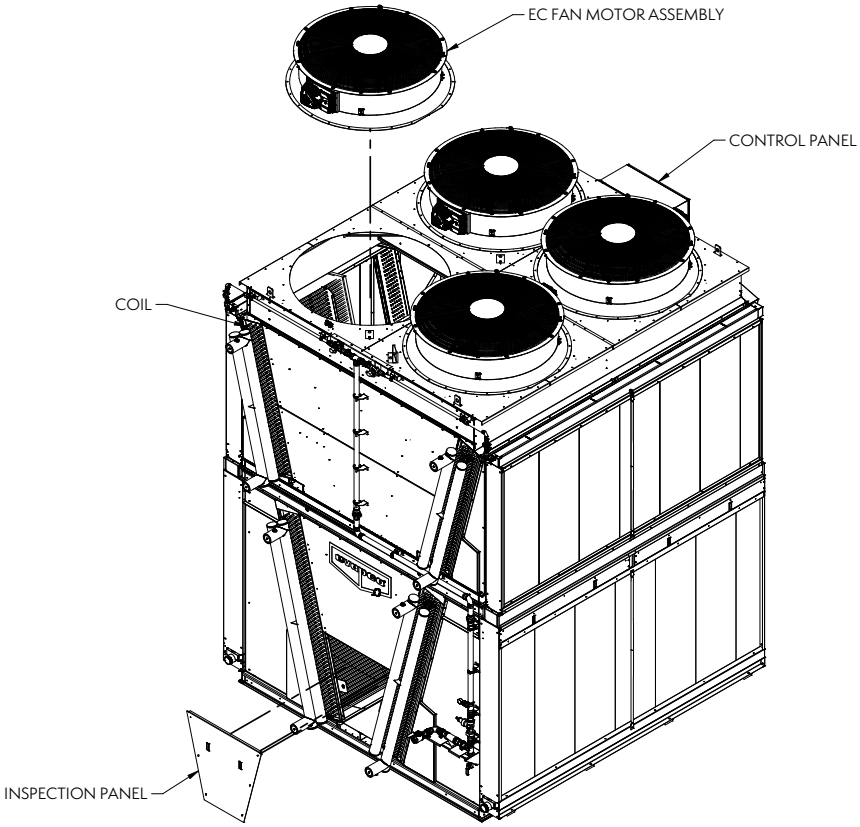

eco-Air Double Stack Adiabatic Cooler with AC Fan Motors and Optional Super Low Sound Fans

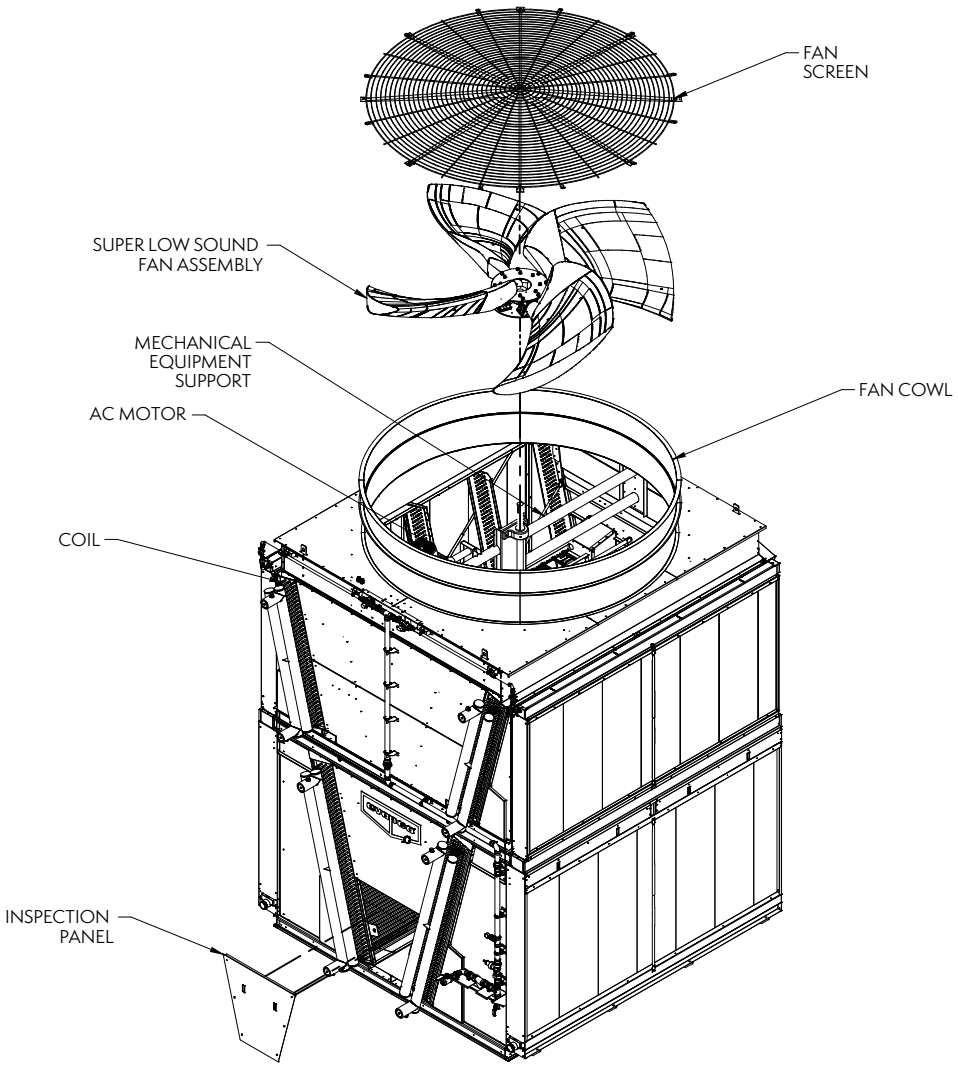

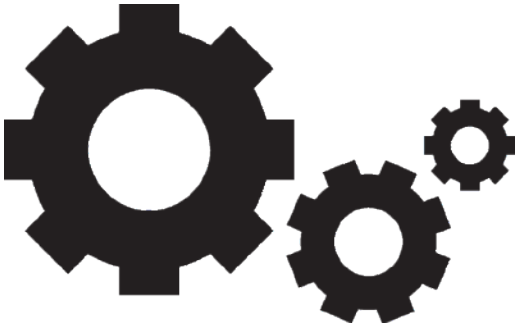

FOR EVAPCO AUTHORIZED PARTS AND SERVICE, CONTACT YOUR LOCAL EVAPCO REPRESENTATIVE OR THE LOCAL SERVICE CENTER

Mr. GoodTower®

EVAPCO, Inc. — World Headquarters & Research/Development Center

P.O. Box 1300 • Westminster, MD 21158 USA
410.756.2600 • marketing@evapco.com • evapco.com

North America

EVAPCO, Inc.
World Headquarters
Westminster, MD USA
410.756.2600
marketing@evapco.com

EVAPCO East
Taneytown, MD USA

EVAPCO East
Key Building
Taneytown, MD USA

EVAPCO Midwest
Greenup, IL USA
217.923.3431
evapcomw@evapcomw.com

Evapcold Manufacturing
Greenup, IL USA

EVAPCO Newton
Newton, IL USA
618.783.3433
evapcomw@evapcomw.com

EVAPCO West
Madera, CA USA
559.673.2207
contact@evapcowest.com

EVAPCO Alcoil, Inc.
York, PA USA
717.347.7500
info@evapco-alcoil.com

EVAPCO Iowa
Lake View, IA USA

EVAPCO Iowa
Sales & Engineering
Medford, MN USA
507.446.8005
evapcomn@evapcomn.com

EVAPCO LMP ULC
Laval, Quebec, Canada
450.629.9864
info@evapcolmp.ca

EVAPCO Select Technologies, Inc. Belmont, MI USA
844.785.9506
emarketing@evapcoselect.com

Refrigeration Vessels & Systems Corporation
Bryan, TX USA
979.778.0095
rvs@rvscorp.com

Tower Components, Inc..
Ramseur, NC USA
336.824.2102
mail@towercomponentsinc.com

EvapTech, Inc.
Edwardsville, KS USA
913.322.5165
marketing@evaptech.com

EVAPCO Dry Cooling, Inc.
Bridgewater, NJ USA
908.379.2665
info@evapcodc.com

EVAPCO Dry Cooling, Inc.
Littleton, CO USA
908.895.3236
info@evapcodc.com

EVAPCO Power México S. de R.L. de C.V.
Mexico City, Mexico
(52) 55.8421.9260
info@evapcodc.com

Asia / Pacific

EVAPCO Asia Pacific Headquarters
Baoshan Industrial Zone Shanghai, P.R. China
(86) 21.6687.7786
marketing@evapcochina.com

EVAPCO (Shanghai) Refrigeration Equipment Co., Ltd.
Baoshan Industrial Zone, Shanghai, P.R. China

EVAPCO (Beijing) Refrigeration Equipment Co., Ltd.
Huairou District, Beijing, P.R. China
(86) 10.6166.7238
marketing@evapcochina.com

EVAPCO Air Cooling Systems (Jiaxing) Company, Ltd.
Jiaxing, Zhejiang,P.R. China
(86) 573.8311.9379
info@evapcochina.com

EVAPCO Australia (Pty.) Ltd.
Riverstone, NSW, Australia
(61) 02.9627.3322
sales@evapco.com.au

EvapTech (Shanghai) Cooling Tower Co., Ltd
Baoshan District, Shanghai, P.R. China.
Tel: (86) 21.6478.0265

EvapTech Asia Pacific Sdn. Bhd.
Puchong, Selangor, Malaysia
(60) 3.8070.7255
marketing-ap@evaptech.com

Europa | Middle East | Africa

EVAPCO Europe
EMENA Headquarters
Tongeren-Borgloon, Belgium
(32) 12.39.50.29
info@evapco.be

EVAPCO Europe BV
Tongeren-Borgloon, Belgium

EVAPCO Europe, S.r.l.
Milan, Italy
(39) 02.939.9041
evapcoeurope@evapco.it

EVAPCO Europe, S.r.l.
Sondrio, Italy

EVAPCO Europe A/S
Aabybro, Denmark
(45) 9824.4999
info@evapco.dk

EVAPCO Europe GmbH
Meerbusch, Germany
(49) 2159.69560
info@evapco.de

EVAPCO Middle East FZCO
Dubai, United Arab Emirates
(971) 56.991.6584
info@evapco.ae

Evap Egypt Engineering Industries Co.
A licensed manufacturer of EVAPCO, Inc.
Nasr City, Cairo, Egypt
(202) 10 054 32 198
evapco@tiba-group.com

EVAPCO S.A. (Pty.) Ltd.
A licensed manufacturer of EVAPCO, Inc.
Isando, South Africa
(27) 11.392.6630
evapco@evapco.co.za

South America

EVAPCO Brasil
Equipamentos Industriais Ltda.
Indaiatuba, São Paulo, Brazil
(55) 11.5681.2000
vendas@evapco.com.br

FanTR Technology Resources
Itu, São Paulo, Brazil
(55) 11.4025.1670
fantr@fantr.com

©2026 EVAPCO Europe
Bulletin EA26OM-E_1026