CONFIDENTIAL
This document is the property of Evapco, Inc. It should not be copied or disclosed without prior written authorization.

EVAPCO, INC.

UNIT	MODEL #	SCALE	DWG. #	REV.	DATE	SERIAL #
COOLING TOWER		NTS	T2124248-ERC-RS			

NOTES:
1. (M)- FAN MOTOR LOCATION
2. HEAVIEST SECTION IS UPPER SECTION
3. MPT DENOTES MALE PIPE THREAD
   FPT DENOTES FEMALE PIPE THREAD
   BFW DENOTES BEVELED FOR WELDING
4. +UNIT WEIGHT DOES NOT INCLUDE ACCESSORIES (SEE SEPARATE DRAWINGS FOR ACCESSORIES)
5. 3/4" DIA. MOUNTING HOLES. REFER TO RECOMMENDED STEEL SUPPORT DRAWING

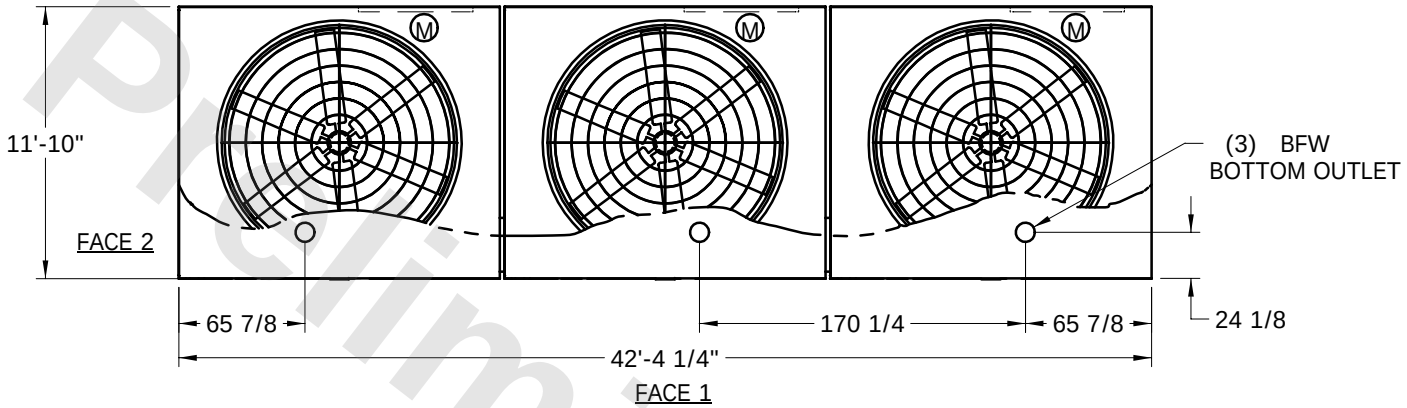

PLAN VIEW

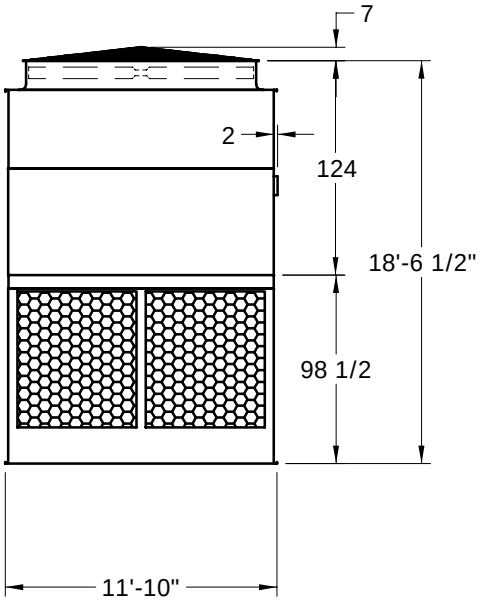

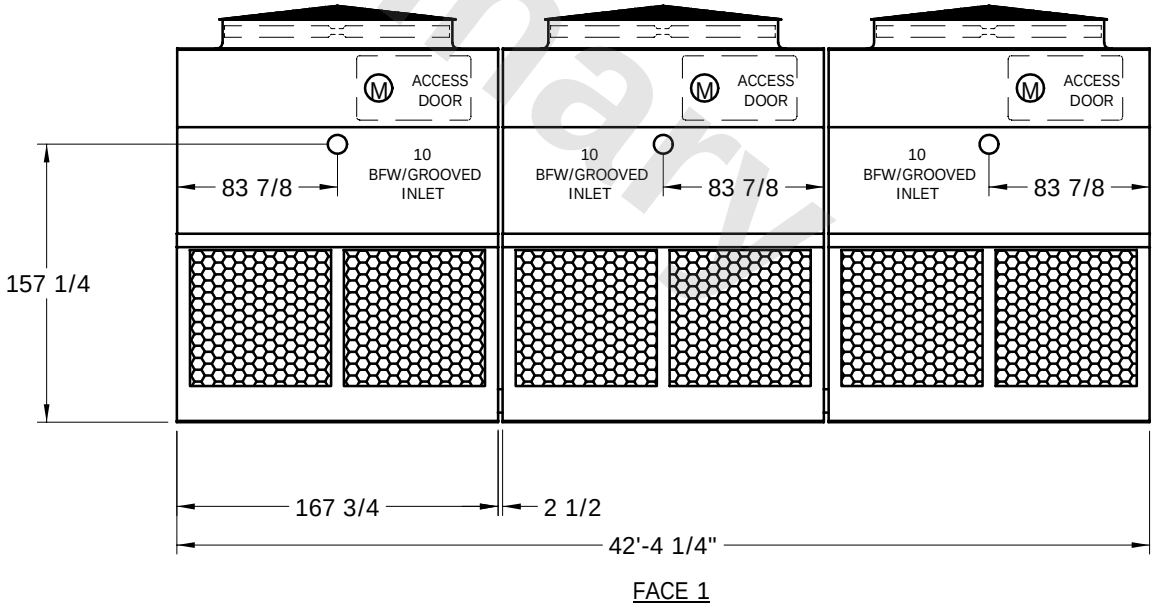

SHIPPING WEIGHT	OPERATING WEIGHT	HEAVIEST SECTION WEIGHT	NO. OF SHIPPING SECTIONS
29700 lbs.+	38940 lbs.	7060 lbs.	6

Preliminary