UNIT	COOLING TOWER		EVAPCO, INC.	DWG. #	T3TM1824-DRD-ST	REV.	-
MODEL #	AT 110-2J18	SCALE NTS		SERIAL #		DATE	5/17/2024

NOTES:
1. (M)- FAN MOTOR LOCATION
2. HEAVIEST SECTION IS UPPER SECTION
3. MPT DENOTES MALE PIPE THREAD
   FPT DENOTES FEMALE PIPE THREAD
   BFW DENOTES BEVELED FOR WELDING
   GVD DENOTES GROOVED
   FLG DENOTES FLANGE
4. +UNIT WEIGHT DOES NOT INCLUDE
   ACCESSORIES (SEE ACCESSORY DRAWINGS)
5. MAKE-UP WATER PRESSURE
   20 psi MIN [137 kPa], 50 psi MAX [344 kPa]
6. 3/4" [19MM] DIA. MOUNTING HOLES.
   REFER TO RECOMMENDED STEEL SUPPORT
   DRAWING
7. DIMENSIONS LISTED AS FOLLOWS:
   ENGLISH FT-IN
   [METRIC] [mm]

Preliminary

FACE C

FACE B

PLAN VIEW

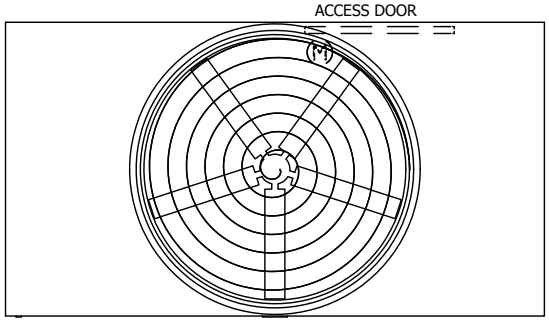

FACE D

FACE A

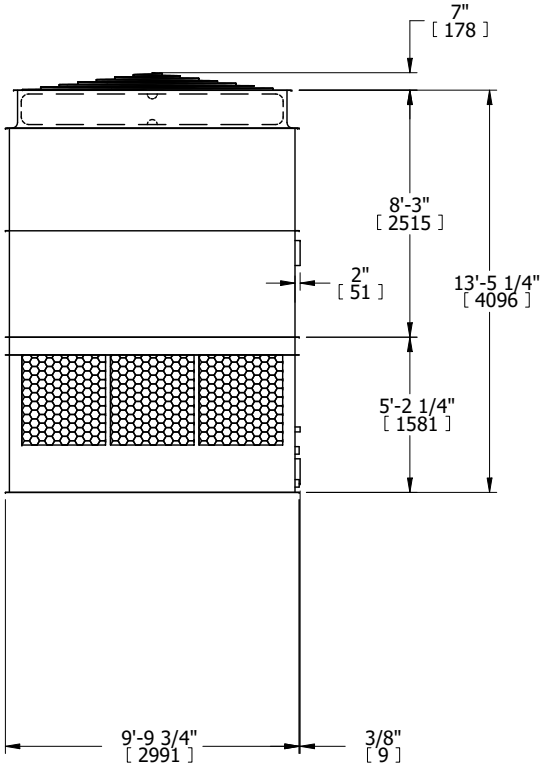

FACE B

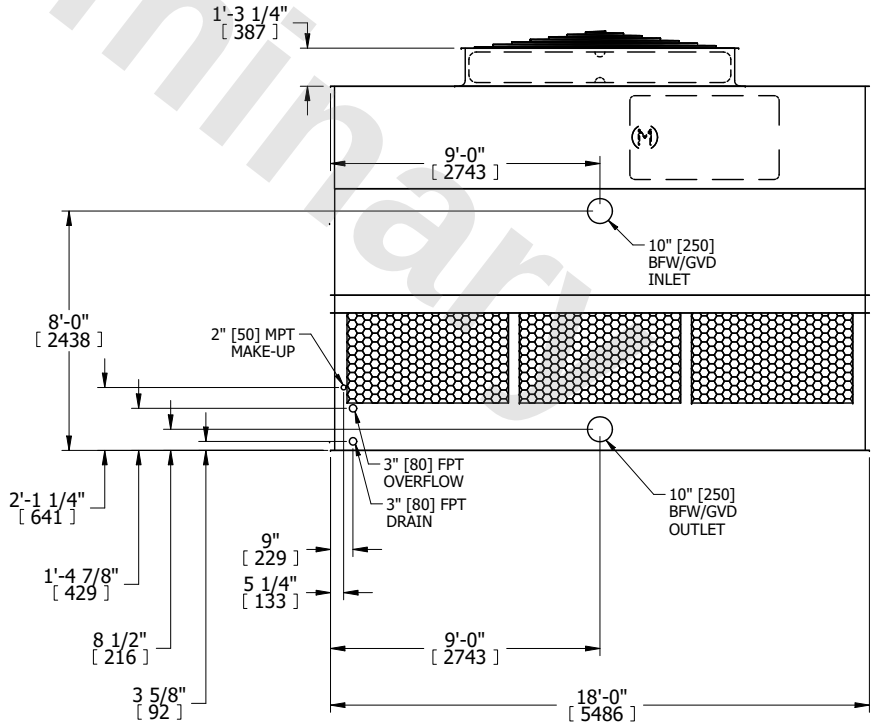

FACE A

SHIPPING WEIGHT	9260 lbs+ [4205] kg+	OPERATING WEIGHT	16860 lbs+ [7650] kg+	HEAVIEST SECTION WEIGHT	5710 lbs+ [2595] kg+	NO. OF SHIPPING SECTIONS	2	DRAWN BY:	KDS